OUR ENERGY – YOUR SUCCESS

VARVEL Transmissions

- WORKING INSTRUCTIONS AND MAINTENANCE
- ATEX MANUAL

BEVI

IUM

- **WORKING INSTRUCTIONS AND MAINTENANCE**
- **ATEX MANUAL**

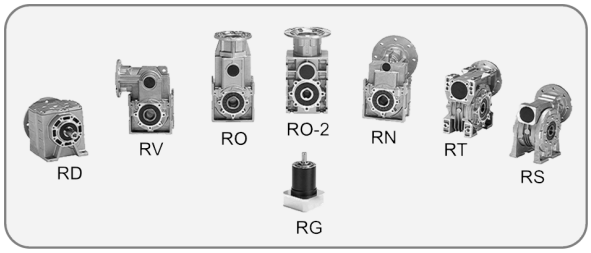

CONTENTS

General Information

Varvel speed reducers and variators are not in the field of application of the Machinery Directive 2006/42/CE as considered "**machinery components**".

Guide of Machinery Directive - § 35 - decrees:

"The Machinery Directive does not apply directly to machinery components, such as, for example, valves, hydraulic cylinders or **gearboxes**, that do not have a specific application as such but are intended to be incorporated into machinery, although the design and construction of such components must enable the complete machinery to comply with the relevant essential health and safety requirements."

Regular operation and the right to guarantee servicing request the observance of information contained in this manual that must be read before the gearbox is put into service.

Safety Warnings

Product Operation

During operation, outer surfaces of gearboxes and variators may warm up because of in motion parts and also by external environmental conditions.

Everything referred to transport, stocking, assembling, setting up, starting and maintenance must be performed by trained personnel and that follows this manual within specific national / regional regulations about safety and prevention of accidents.

Prevalent Use

Gearboxes and variators referred to in this manual are destined to operate industrial applications and they correspond to standards and regulations where applicable.

Performances and technical data are available in the unit's nameplate and from the related documentation.

Transport

Carefully check the state of the goods at their receipt and immediately notify the possible damages to the carrier.

Long-Term Storage

Stocked units must be kept in dry warehouse and dust free.

For storage longer than 3 months, apply anti-oxidants on the shafts and machined surfaces paying special attention to oil seal lip working surface.

Storages longer than one year reduce bearing and oil seal grease properties; prior to starting, swing shafts to prevent any damage.

Further storages recommend oil seal replacement.

Environmental Management

In conformity with Environmental Certification ISO14001, we recommend the following to dispose of

- scrapped gearbox components: to deliver to authorised centres for metal object collection:
- drained oils and lubricants: to deliver to Exhausted Oil Centres;
- product accompanying packages (pallets, carton boxes, paper, plastic, etc.): to deliver into regeneration / recycling circuits as far as possible, by delivering separate waste classes to authorised companies.

Product Layout

The following layouts supply a generic help in finding out the most significant parts of the products.

Various design executions, assembling versions, number of stages actually origin a variety of solutions and therefore, we recommend to refer to the appropriate catalogue and/or Engineering Department.

Coupling

"G"
The flexible coupling "G" is supplied on the Series RD, RN, RO, RV, RP, RS, RT as standard input equipment.
The bore version with keyway is supplied on demand.

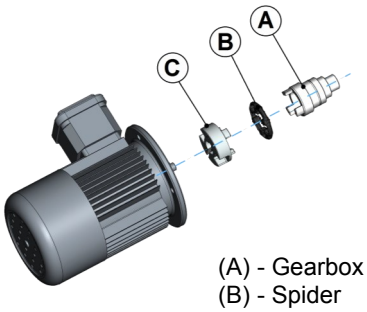

(A) - Gearbox half-coupling
(B) - Spider
(C) - Motor half-coupling

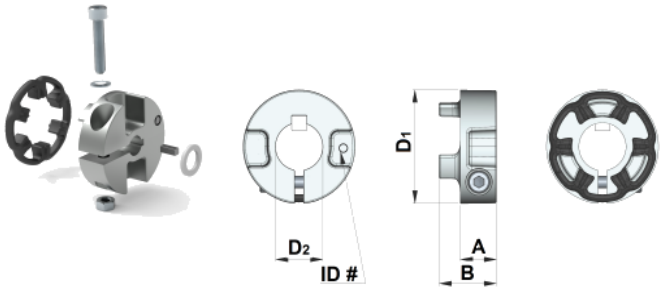

Advantages

- Friction clamped coupling on motor shaft
- IEC/NEMA adapters and couplings fitted on already assembled gearbox
- Elimination of fretting corrosion between bore and key
- Zero backlash in gearbox/motor connection
- Angular allowed misalignment lower than 1°
- High torsional rigidity

Type	Motor	Kit Part No.	RS - RT	Mt [Nm]	Mt_1 [Nm]	Mt_2 [Nm]	A [mm]	B [mm]	D_1 [mm]	D_2 [mm]	ID#
G3	IEC	KG3.009	28-40	4.5 - 6	15	8-10	11	19	30	9	309
		KG3.011	28-40	4.5 - 6	15	10-12			30	11	311
		KG3.014	40	6.5- 7.5	28	15-20			36	14	314
G5	IEC	KG5.009	50-60	9 - 10	15	8-10	14.5	23	45	9	509
		KG5.011	50-60		20	10-12			45	11	511
		KG5.014	50-60		25	15-20			45	14	514
		KG5.019	50-60		40	25-30			45	19	519
		KG5.024	60		50	30-40			52	24	524
G6	IEC	KG6.014	70	15 - 18	60	40-50	19.5	31.5	58	14	614
		KG6.019	70-85-110		80	60-70				19	619
		KG6.024	70-85-110		120	80-100				24	624
		KG6.028	70-85-110		150	100-120				28	628

Type	Motor	Kit Part No.	RS - RT	Mt [in-lb]	Mt_1 [in-lb]	Mt_2 [in-lb]	A [in]	B [in]	D_1 [in]	D_2 [in]	ID#
G3	NEMA	KG3.N42	28-40	40 - 53	133	71-89	0.43	0.74	1.17	3/8"	3N42
		KG3.N48	40	40 - 53	177	89-106			1.40	1/2"	3N48
G5	NEMA	KG5.N56	50-60	80 - 89	354	221-266	0.57	0.91	1.76	5/8"	5N56
		KG5.N140	60		443	266-354			2.03	7/8"	5N140
G6	NEMA	KG6.N56	70-85-110	133 - 159	885	531-620	0.76	1.23	2.268	5/8"	6N56
		KG6.N140	70-85-110		1062	708-885				7/8"	6N140
		KG6.N180	70-85-110		1328	885-1062				1-1/8"	6N180

Mt - Screw locking torque
Mt_1 - Transmissible torque with key
Mt_2 - Transmissible torque without key

RC-2
The layout shows the general structure of a two-stage foot-mounted helical gearbox type FRC (sizes 05 to 30).
Ask for part list of other sizes 40 to 60, flanged output, input solid shaft and four stage executions.

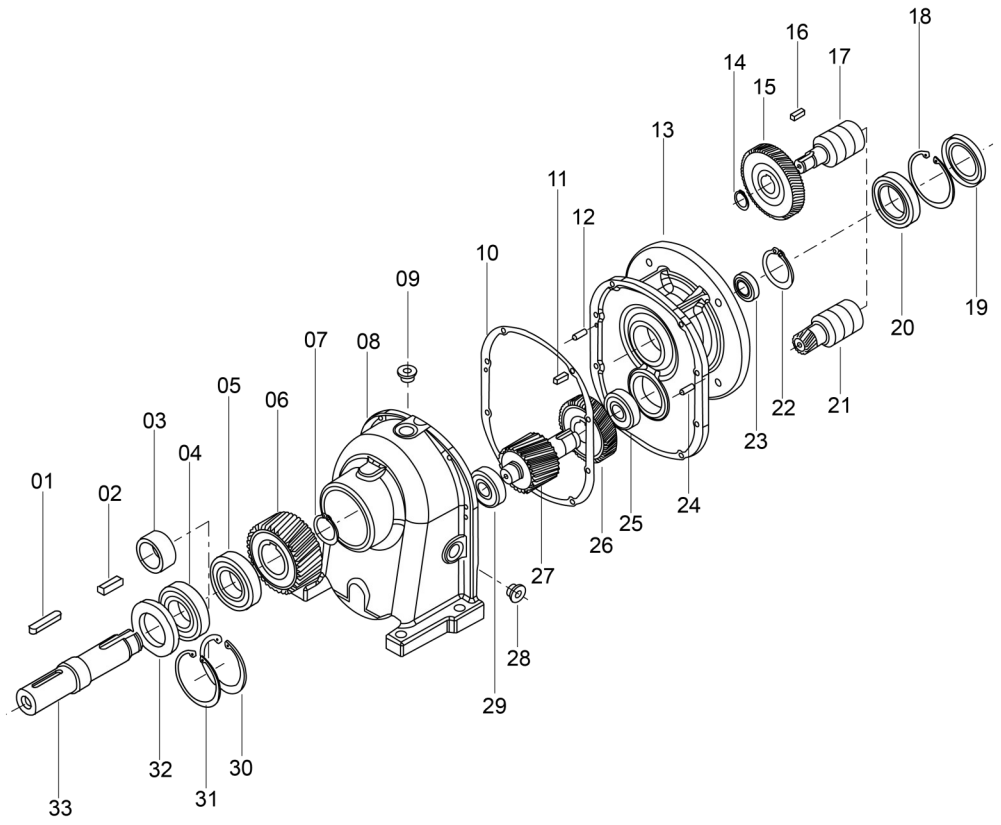

01	Key	13	Motor cover	25	Bearing
02	Key	14	Circlip	26	Gear
03	Spacer	15	Pinion	27	Pinion shaft
04	Bearing	16	Key	28	Oil plug
05	Bearing	17	Input hollow shaft	29	Bearing
06	Gear	18	Circlip	30	Circlip
07	Circlip	19	Oil seal	31	Seeger
08	Housing	20	Bearing	32	Circlip
09	Oil plug	21	Input hollow pinion shaft	33	Output shaft
10	Gasket	22	Circlip		
11	Key	23	Bearing		
12	Parallel pin	24	Parallel pin		

RC-3
The layout shows the general structure of a two-stage foot-mounted helical gearbox type FRC (sizes 05 to 30).
Ask for part list of other sizes 40 to 60, flanged output, input solid shaft and four stage executions.

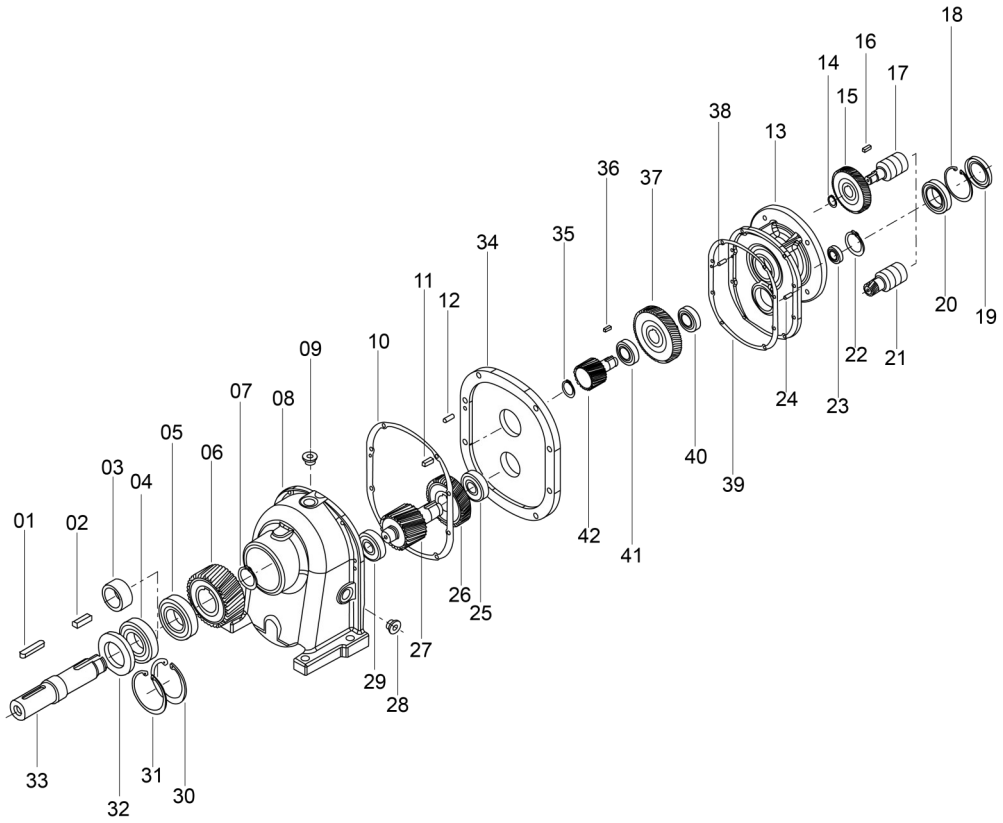

03	Spacer (RC40, 50, 60)	20	Bearing	33	Output shaft
06	Gear	21	Input hollow shaft, toothed	34	Intermediate housing
08	Housing	22	Circlip	35	Circlip
10	Gasket	23	Bearing	36	Key
12	Parallel pin	24	Parallel pin	37	Pinion
13	Input cover	25	Bearing	38	Parallel pin
14	Circlip	26	Gear	39	Gasket
15	Pinion	27	Pinion	40	Bearing
16	Key	29	Bearing	41	Bearing
17	Input hollow shaft, stud	30	Circlip (RC05, 10, 20, 30)	42	Pinion
18	Circlip	31	Circlip (RC05, 10, 20, 30)		
19	Oil seal	32	Oil seal		

RD-2
The layout shows the general structure of a two-stage foot-mounted helical gearbox type FRD.
Ask for part list of flanged output and input solid shaft.

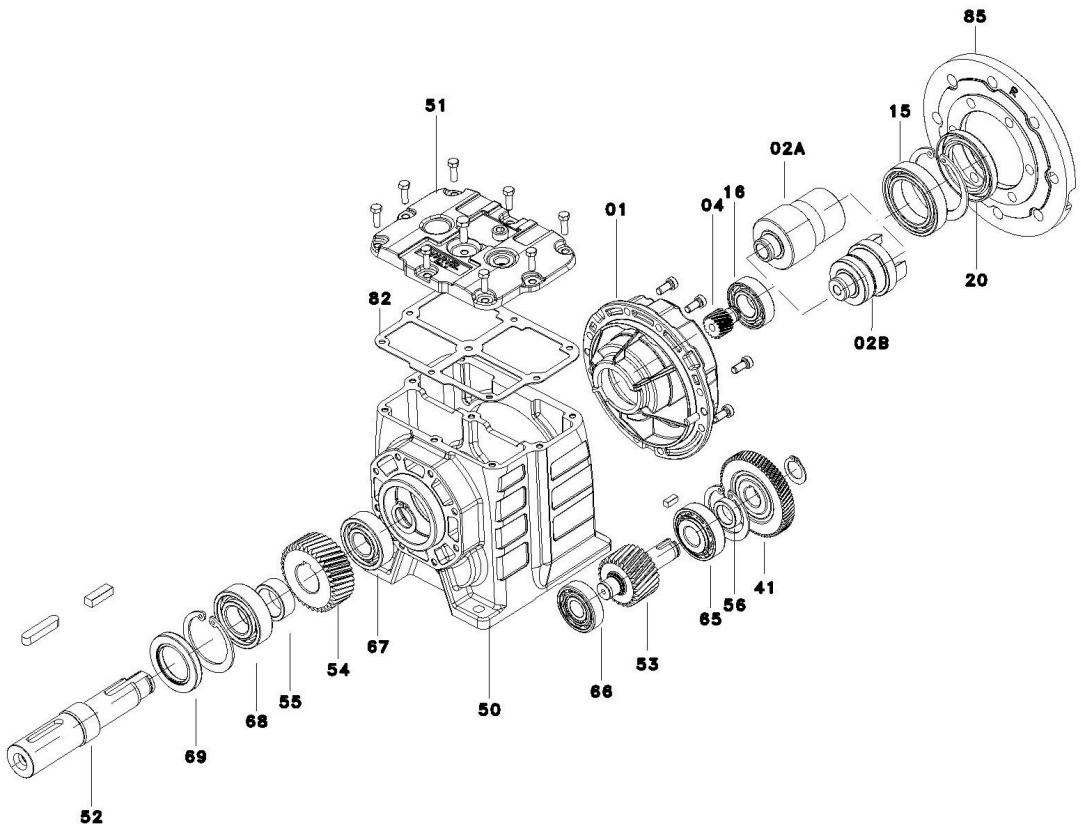

01	Input cover	54	Gear		
02A	Hollow input IEC	55	Spacer		
02B	Hollow input "G"	56	Circlip		
03	3rd stage shaft	65	Bearing		
04	Pinion	66	Bearing		
05	Gear	67	Bearing		
15	Bearing	68	Bearing		
16	Bearing	69	Oil seal		
17	Bearing	82	Gasket		
18	Bearing	85	Motor Flange		
19	Spacer				
20	Oil seal				

RD-3
The layout shows the general structure of a three-stage foot-mounted helical gearbox type FRD.
Ask for part list of flanged output and input solid shaft.

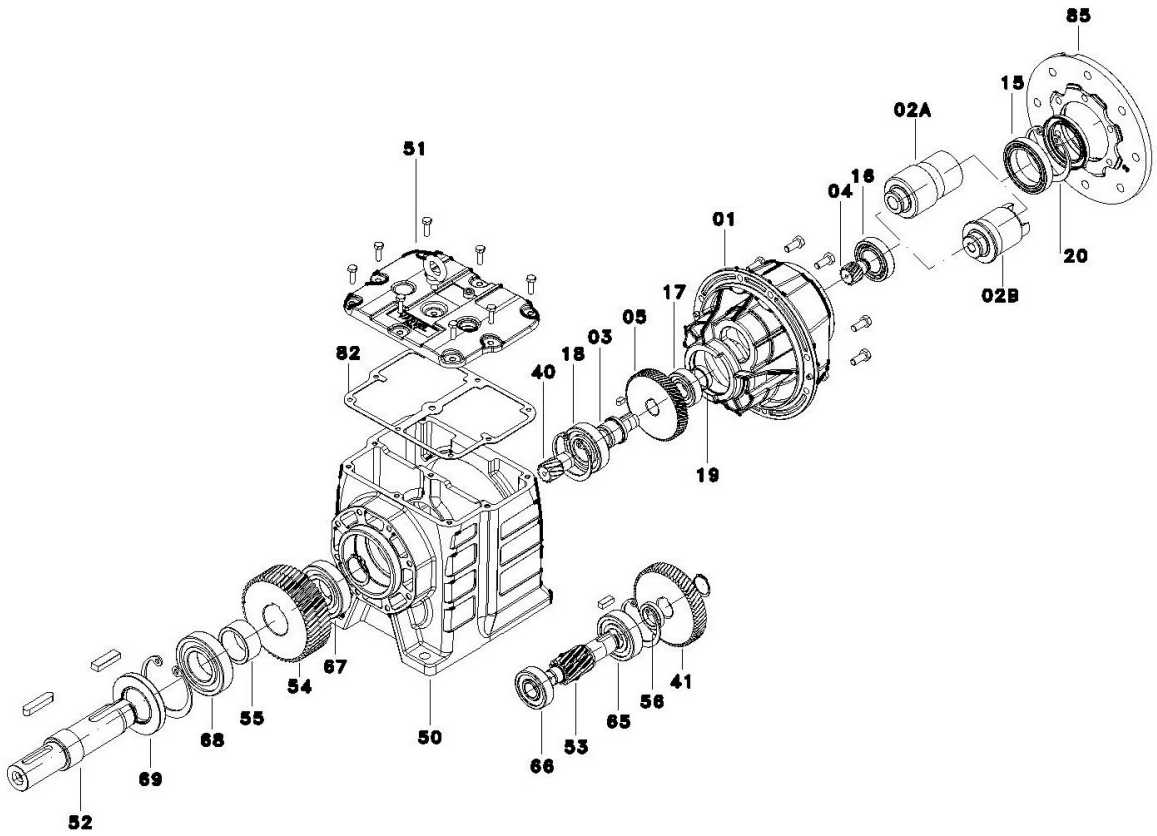

01	Input cover	40	Pinion	68	Bearing
02A	Hollow input IEC	41	Gear	69	Oil seal
02B	Hollow input "G"	50	Housing	82	Gasket
03	3rd stage shaft	51	Upper cover	85	Motor flange
04	Pinion	52	Output shaft		
05	Gear	53	Pinion		
15	Bearing	54	Gear		
16	Bearing	55	Spacer		
17	Bearing	56	Spacer		
18	Bearing	65	Bearing		
19	Spacer	66	Bearing		
20	Oil seal	67	Bearing		

RG-1
The layout shows the general structure of a one-stage planetary gearbox type FRG.

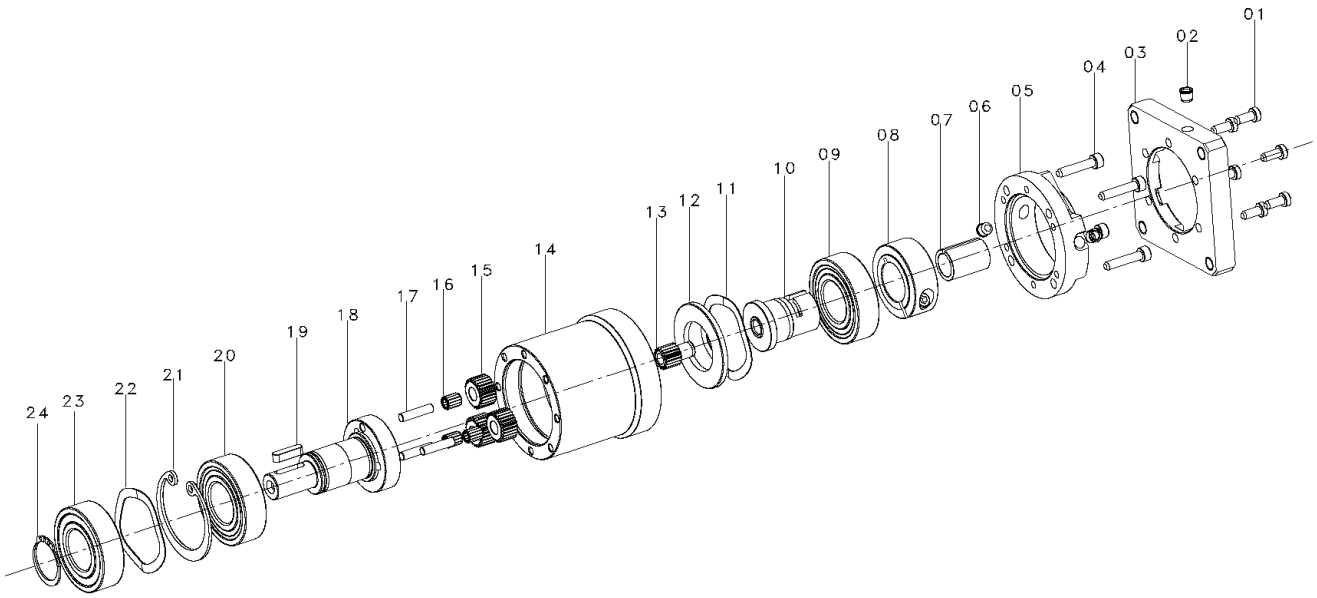

01	Screw	13	Sun gear		
02	Plug	14	Ring gear body		
03	Motor flange	15	Planet gear		
04	Screw	16	Needle bearing		
05	Input flange	17	Planet shaft		
06	Plug	18	Planet carrier		
07	Adapter	19	Key		
08	Clamp coupling	20	Bearing		
09	Bearing	21	Circlip		
10	Input shaft	22	Shim		
11	Shim	23	Bearing		
12	Spacer	24	Circlip		

RG-2
The layout shows the general structure of a two-stage planetary gearbox type FRG.

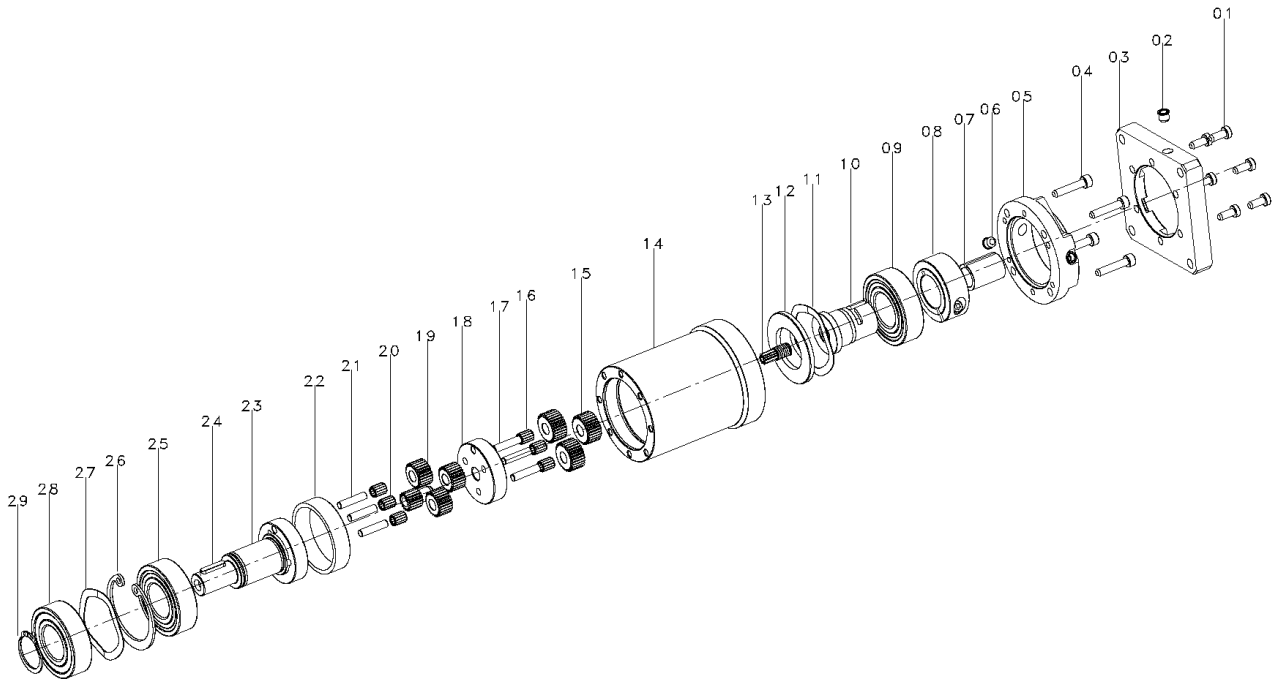

01	Screw	13	Sun gear	25	Bearing
02	Plug	14	Ring gear body	26	Circlip
03	Motor flange	15	Planet gear	27	Shim
04	Screw	16	Needle bearing	28	Bearing
05	Input flange	17	Planet shaft	29	Circlip
06	Plug	18	Planet carrier		
07	Adapter	19	Planet gear		
08	Clamp coupling	20	Needle bearing		
09	Bearing	21	Planet shaft		
10	Input shaft	22	Spacer		
11	Shim	23	Planet carrier		
12	Spacer	24	Key		

RN-2
The layout shows the general structure of a two-stage parallel shaft gearbox type FRN with through hollow output shaft.
Ask for part list of flanged output and input solid shaft.

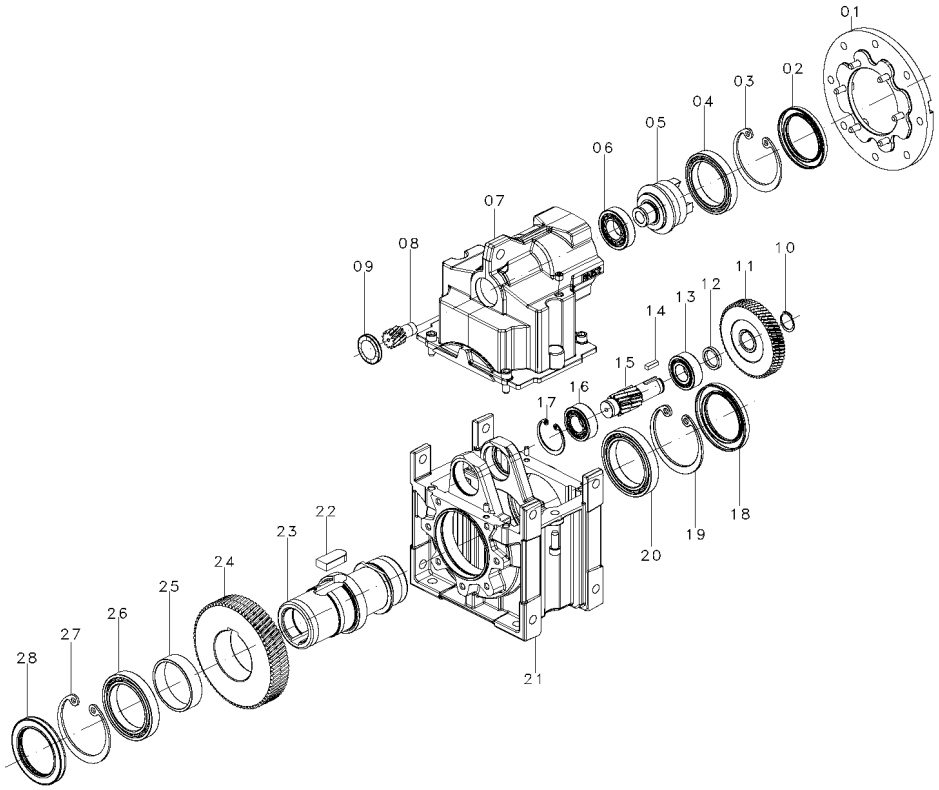

01	Input flange	13	Bearing	25	Spacer
02	Oil seal	14	Key	26	Bearing
03	Circlip	15	Pinion	27	Circlip
04	Bearing	16	Bearing	28	Oil seal
05	Input shaft	17	Circlip		
06	Bearing	18	Oil seal		
07	Cover	19	Circlip		
08	Pinion	20	Bearing		
09	Oil seal RCA	21	Body		
10	Circlip	22	Key		
11	Gear	23	Output shaft		
12	Spacer	24	Gear		

RN-3
The layout shows the general structure of a two-stage parallel shaft gearbox type FRN with through hollow output shaft.
Ask for part list of flanged output and input solid shaft.

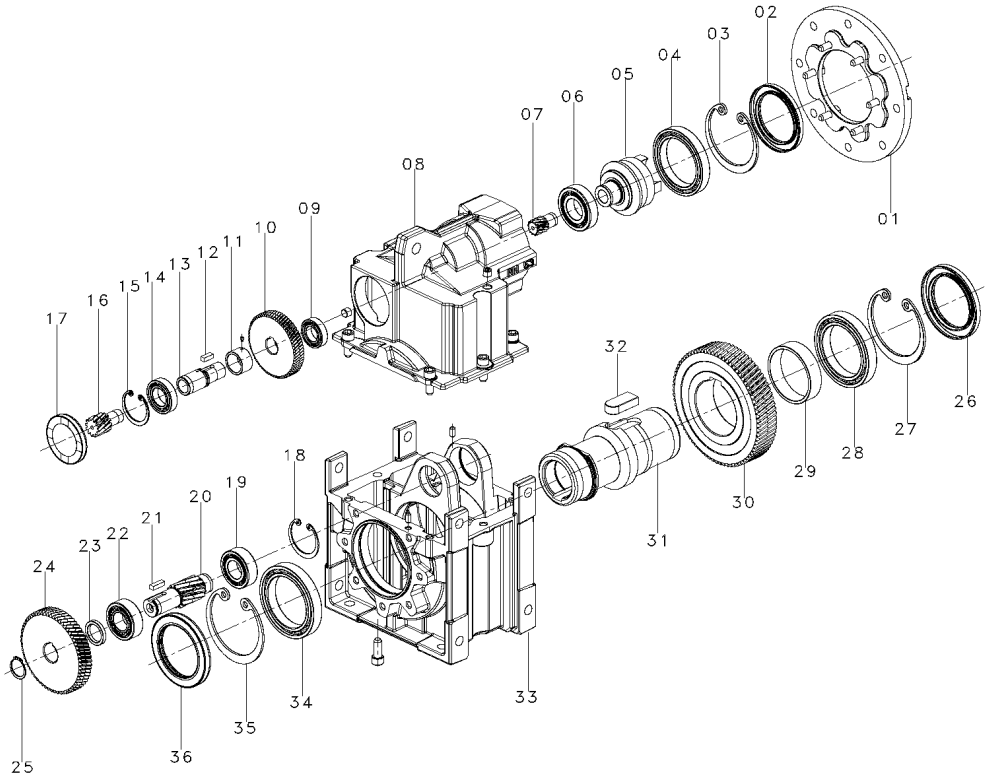

01	Motor flange	13	Shaft	25	Circlip
02	Oil seal	14	Bearing	26	Oil seal
03	Circlip	15	Circlip	27	Circlip
04	Bearing	16	Pinion	28	Bearing
05	Input shaft	17	Oil seal RCA	29	Spacer
06	Bearing	18	Circlip	30	Gear
07	Pinion	19	Bearing	31	Output shaft
08	Cover	20	Pinion	32	Key
09	Bearing	21	Key	33	Body
10	Gear	22	Bearing	34	Bearing
11	Spacer	23	Spacer	35	Circlip
12	Key	24	Gear	36	Oil seal

RO-2
The layout shows the general structure of a two-stage bevel/helical gearbox type FRO with through hollow output shaft.
Ask for part list of flanged output and input solid shaft.

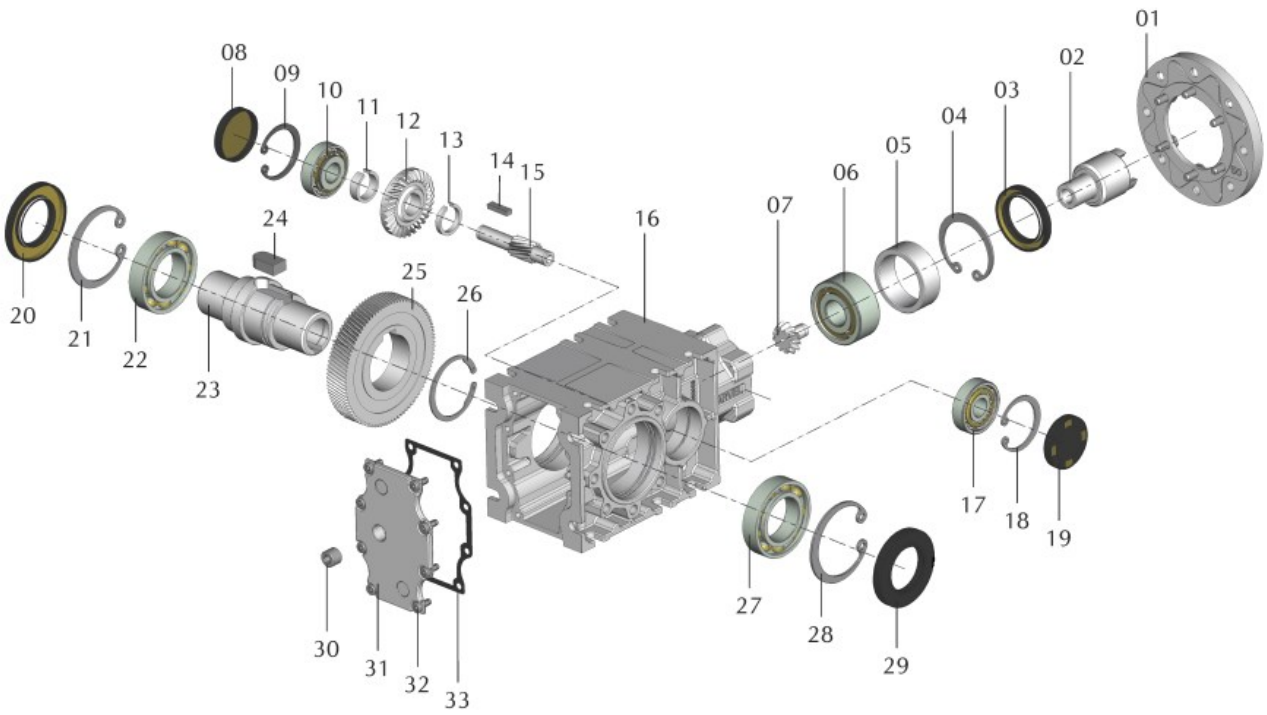

01	Motor flange	13	Spacer	25	Gear
02	Input shaft	14	Key	26	Circlip
03	Oil seal	15	Pinion	27	Bearing
04	Circlip	16	Housing	28	Circlip
05	Spacer	17	Bearing	29	Oil seal
06	Bearing	18	Circlip	30	Plug
07	Gleason pinion	19	Oil seal	31	Cover
08	Oil seal	20	Oil seal	32	Screw
09	Circlip	21	Circlip	33	Gasket
10	Bearing	22	Bearing		
11	Spacer	23	Output shaft		
12	Gleason gear	24	Key		

RO-3
The layout shows the general structure of a three-stage bevel/helical gearbox type FRO with through hollow output shaft.
Ask for part list of flanged output and input solid shaft.

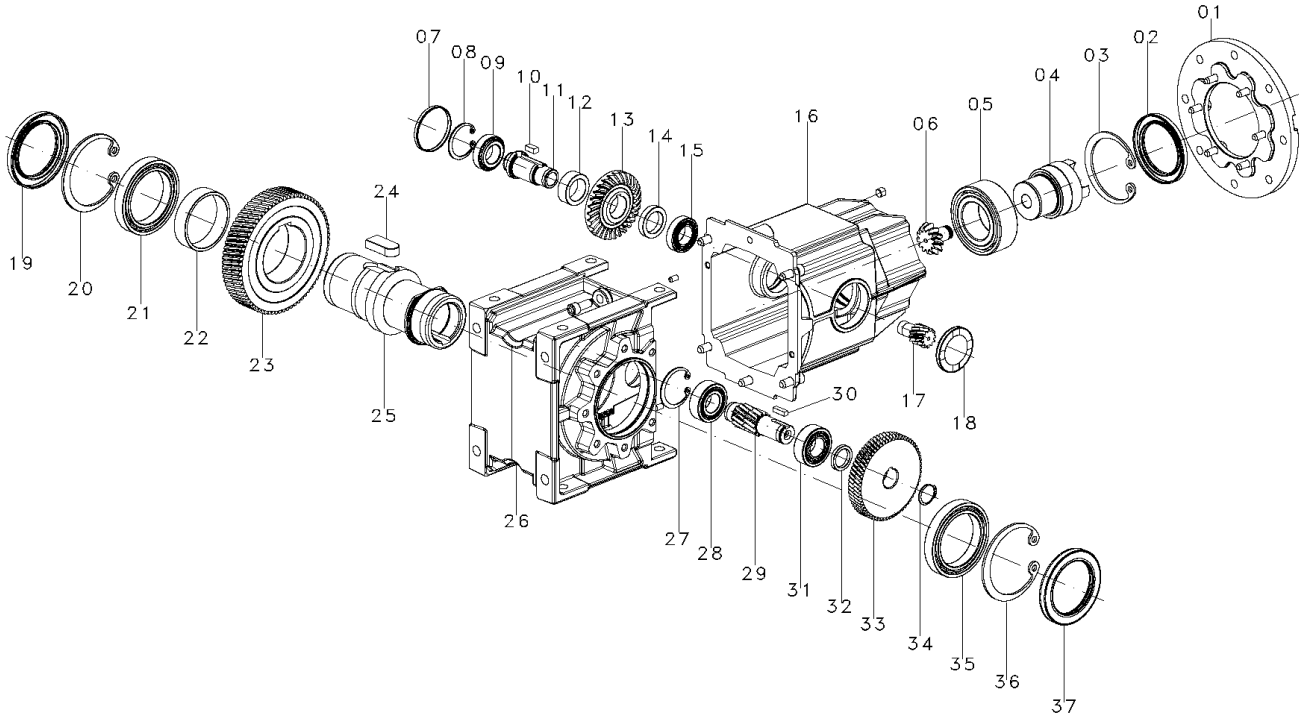

01	Motor flange	13	Gear	25	Output shaft
02	Oil seal	14	Spacer	26	Body
03	Circlip	15	Bearing	27	Circlip
04	Input shaft	16	Cover	28	Bearing
05	Bearing	17	Pinion	29	Pinion
06	Pinion	18	Oil seal RCA	31	Bearing
07	Oil seal RCA	19	Oil seal	32	Spacer
08	Circlip	20	Circlip	33	Gear
09	Bearing	21	Bearing	34	Circlip
10	Key	22	Spacer	35	Bearing
11	Shaft	23	Gear	36	Circlip
12	Spacer	24	Key	37	Oil seal

RV-3
The layout shows the general structure of a three-stage bevel/helical gearbox type FRV with through hollow output shaft.
Ask for part list of flanged output and input solid shaft.

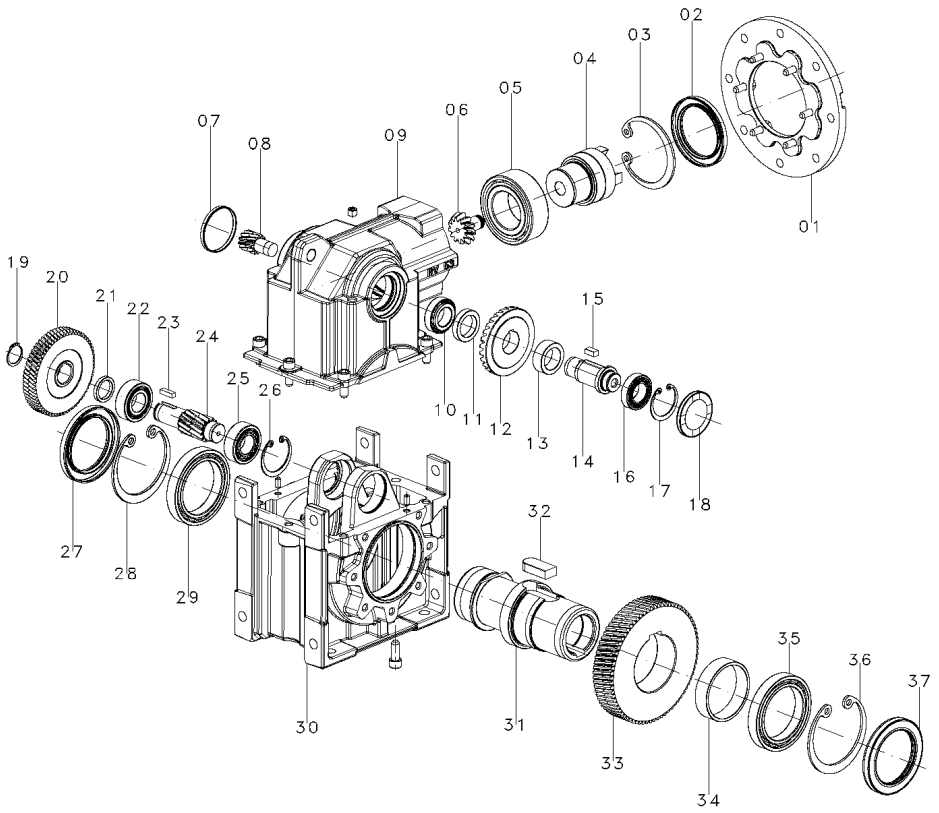

01	Motor flange	13	Bearing	25	Bearing
02	Oil seal	14	Shaft	26	Circlip
03	Circlip	15	Key	27	Oil seal
04	Input shaft	16	Bearing	28	Circlip
05	Bearing	17	Circlip	29	Bearing
06	Pinion	18	Oil seal RCA	30	Body
07	Oil seal RCA	19	Circlip	31	Output shaft
08	Pinion	20	Gear	33	Gear
09	Cover	21	Spacer	34	Spacer
10	Bearing	22	Bearing	35	Bearing
11	Spacer	23	Key	36	Circlip
12	Gear	24	Pinion	37	Oil seal

RP and XA
The layout shows the general structure of a one-stage flange mounting helical gearbox type FRP and FXA .

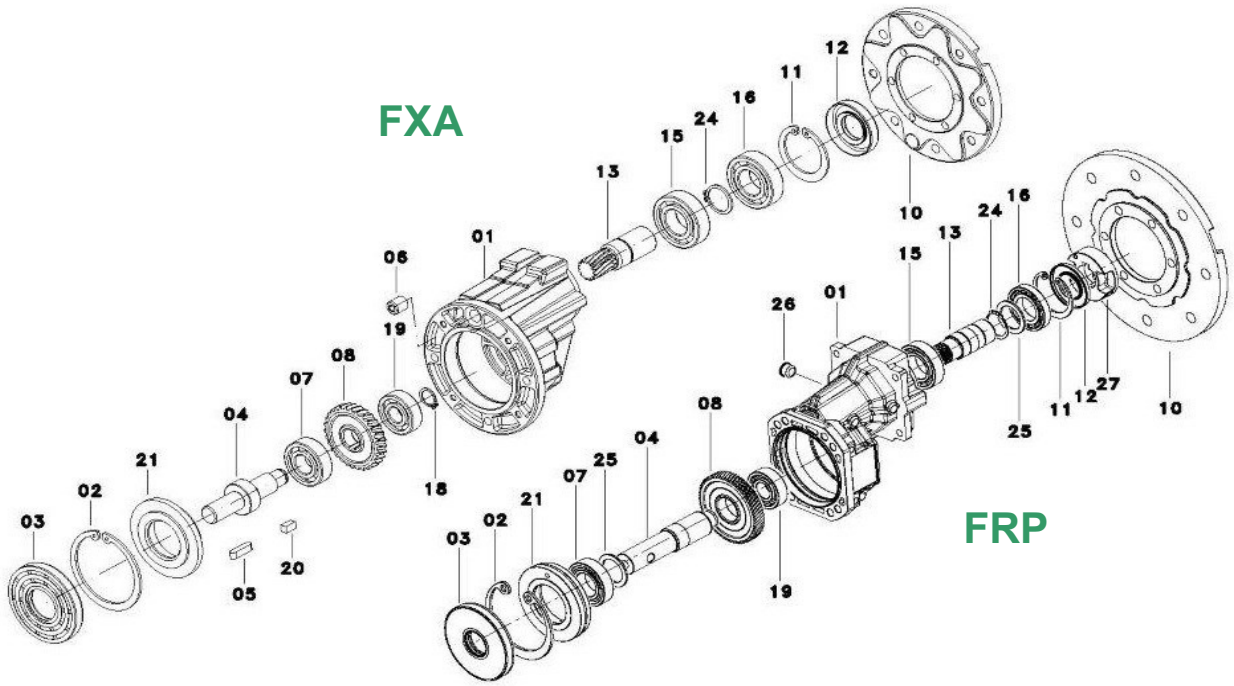

01	Body	15	Bearing		
02	Circlip	16	Bearing		
03	Oil seal	18	Circlip		
04	Output shaft	19	Bearing		
05	Key	20	Key		
06	Screw	21	Adapter		
07	Bearing	24	Circlip		
08	Gear	25	Spacer		
10	Motor flange	26	Plug		
11	Circlip	27	Flexible coupling		
12	Oil seal				
13	Pinion				

RS
The layout shows the general structure of a worm gearbox type FRS with through hollow output shaft and shaft mounting. The Series TA (helical / worm) are made of a helical one-stage gearbox XA mounted as input stage onto a standard worm box RS and the Series RS/RS (two stage worm) of two standard worm boxes RS and an appropriate combination kit.

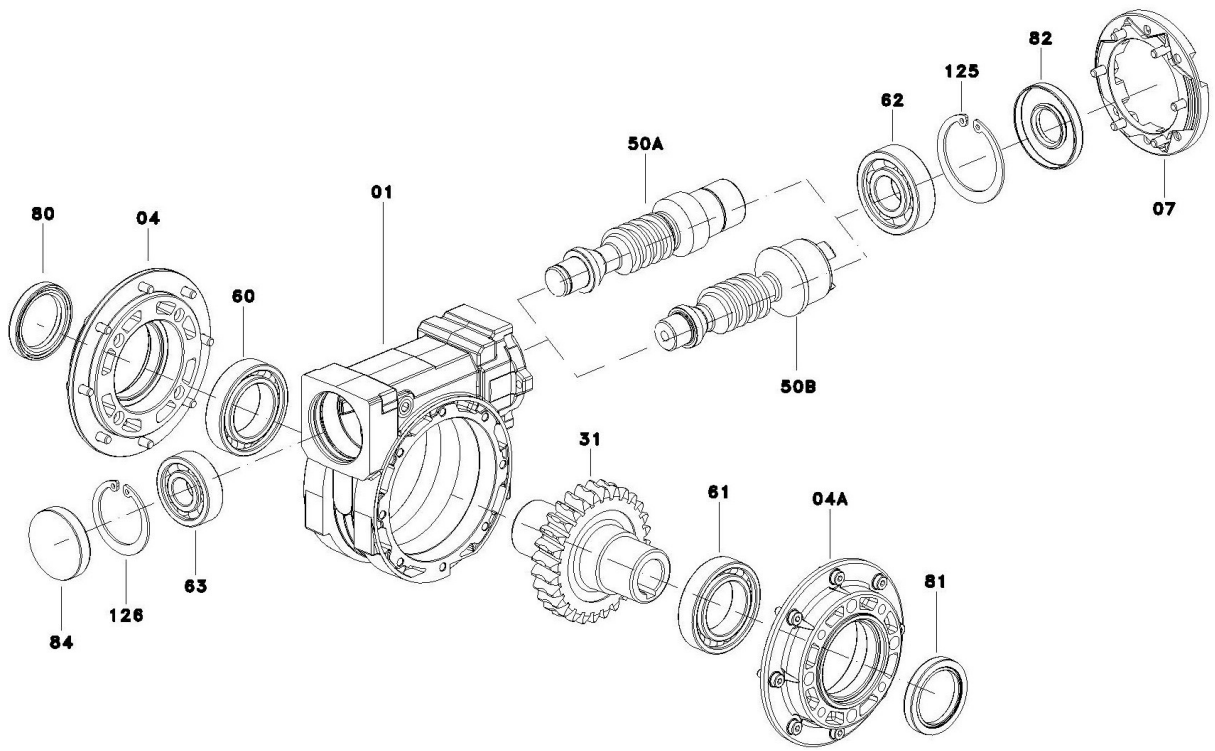

01	Body	82	Oil seal		
04	Side cover	84	Oil seal RCA		
07	Motor flange	125	Circlip		
31	Worm wheel	126	Circlip		
50A	IEC wormshaft				
50B	“G coupling” wormshaft				
60	Bearing				
61	Bearing				
62	Bearing				
63	Bearing				
80	Oil seal				
81	Oil seal				

RT
The layout shows the general structure of a foot-mounted worm gearbox type FRT.
The Series TA (helical / worm) are made of a helical one-stage gearbox XA mounted as input stage onto a standard worm box RT and the Series RT/RT (two stage worm) of two standard worm boxes RT and an appropriate combination kit.

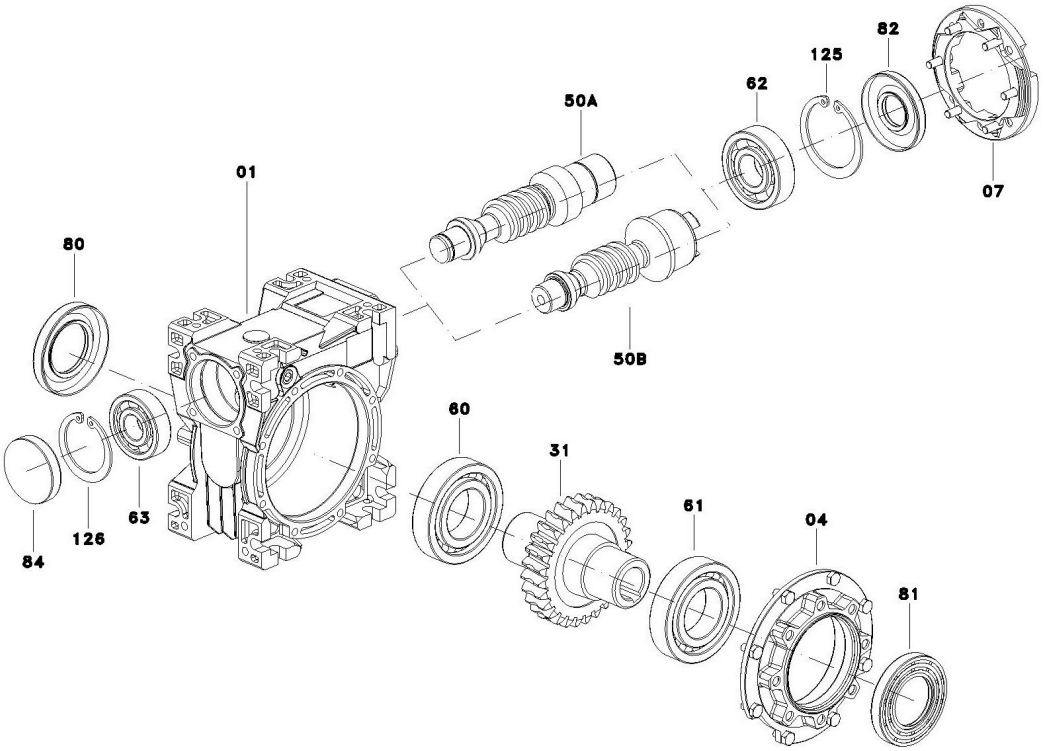

01	Housing	82	Oil seal		
04	Side cover	84	Oil seal RCA		
07	Motor flange	125	Circlip		
31	Worm wheel	126	Circlip		
50A	IEC wormshaft				
50B	“G coupling” wormshaft				
60	Bearing				
61	Bearing				
62	Bearing				
63	Bearing				
80	Oil seal				
81	Oil seal				

TLI - TLE
The layout shows the general structure of a built-in torque limiter type TLI incorporated inside a worm gearbox Series RS or RT and type TLE to fit inside a worm gearbox Series RS or RT.
The TLI type is incorporated during the gearbox assembly, while the type TLE can be directly fitted into the hollow shaft of an already assembled standard gearboxes without any special tooling.

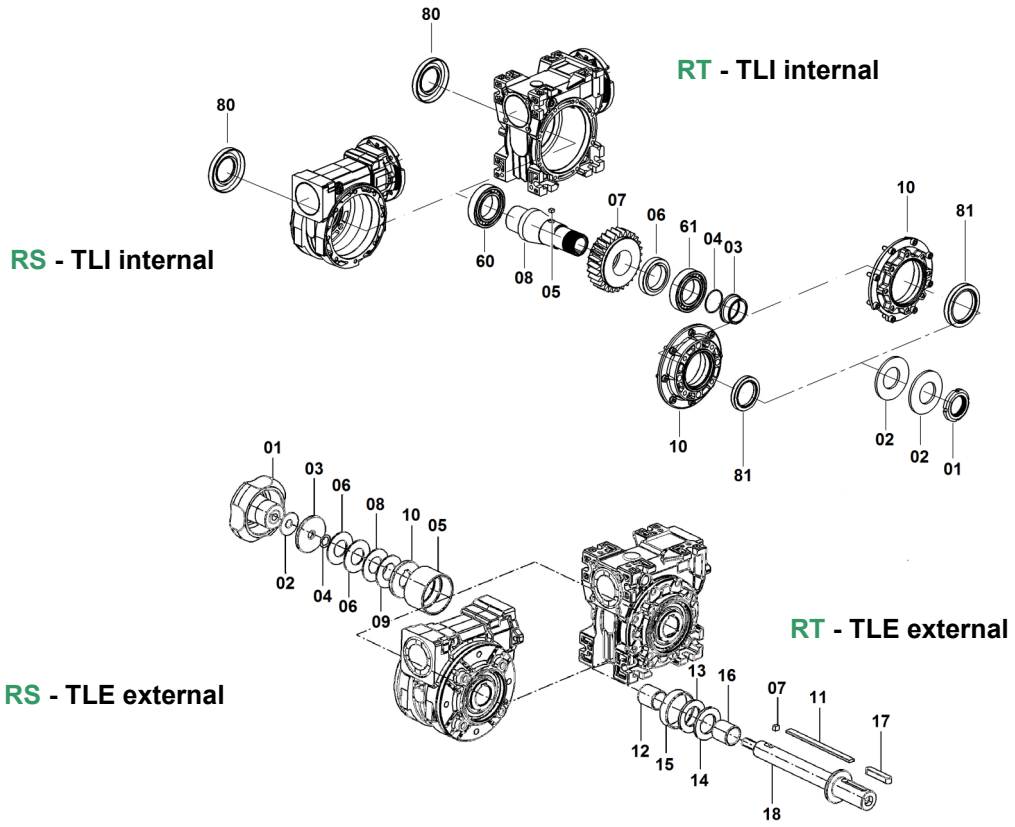

TLI - Internal	
01	Lock nut
02	Bellville washer
03	Bush
04	Oil seal
05	Key
06	Spacer
07	Worm wheel
08	Hollow output shaft
10	Cover
60	Bearing
61	Bearing
80	Oil seal
81	Oil seal

TLE - External	
01	Setting torque hand wheel
02	Belville washer
03	Spacer
04	Spacer
05	Rear protection
06	Belville washer
07	Key
08	Thrust washer
09	Rear friction
10	Rear washer
11	Key
12	Rear bush
13	Front washer
14	Front friction
15	Front protection
16	Front bush
17	Key
18	Low speed shaft

VR
The layout shows the general structure of a flange-mounted variator without gearbox type.

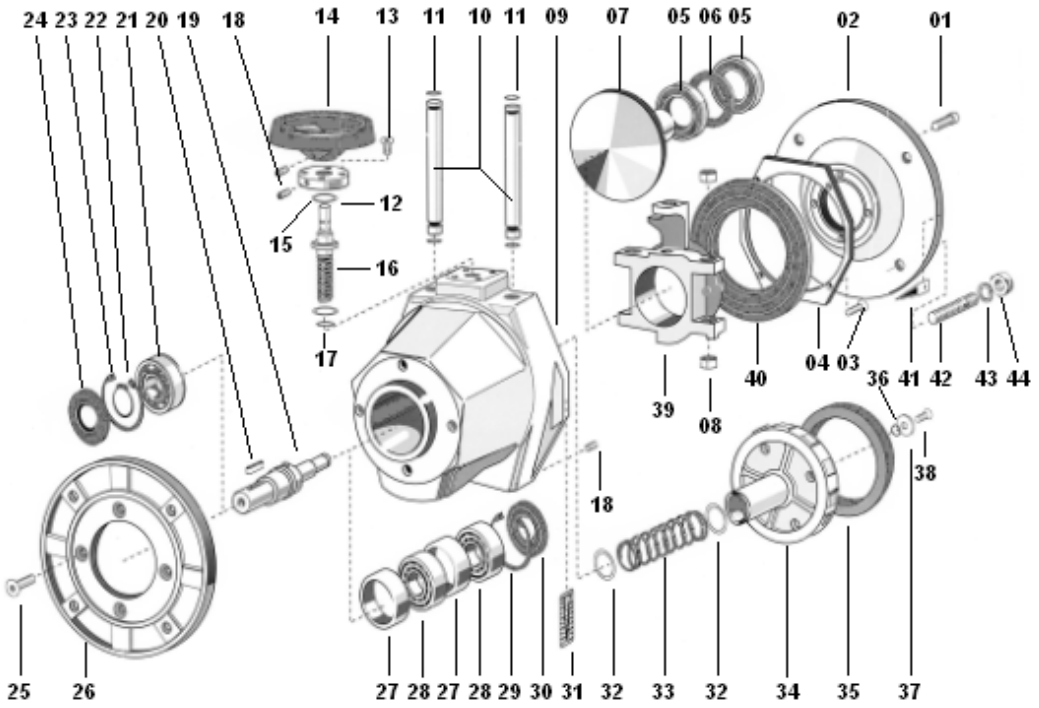

01	Screw	14	Control hand wheel	27	Spacer
02	IEC motor flange	15	Control shaft lock	28	Bearing
03	Screw	16	Control shaft	29	Circlip
04	Seal plate	17	Oil seal OR	30	Oil seal
05	Bearing	18	Screw	31	Index scale
06	Spacer	19	Output shaft	32	Circlip
07	Cone	20	Key	33	Spring
09	Body	21	Bearing	34	Friction ring carrier
10	Cylindrical slide	22	Circlip	35	Friction ring
11	Oil seal OR	23	Circlip	39	Cone holder
12	Oil seal OR	24	Oil seal	40	Bellows seal
13	Screw	26	Output flange	41	Index

VS

The layout shows the general structure of a flange-mounted variator without gearbox type.

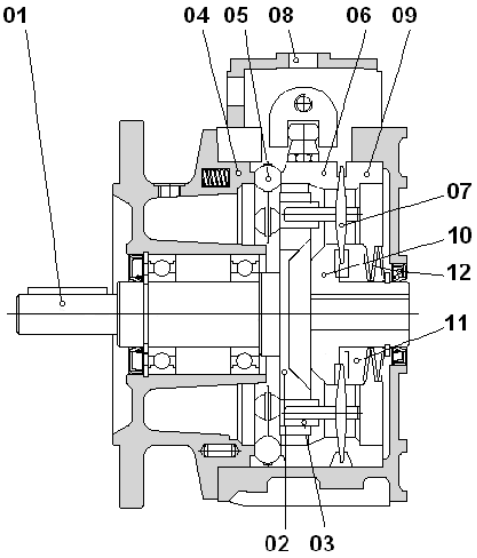

01	Output shaft				
02	Planet carrier				
03	Sliding bush				
04	Adjusting track				
05	Ball carrier				
06	External mobile track				
07	Planet				
08	Adjusting box				
09	External fixed track				
10	Internal fixed track				
11	Internal mobile track				
12	Belville washer				

Installation

Tolerances

Tolerances are recommended according to DIN 748 as follows

- Shafts: solid input or output ISO h6
  hollow input ISO E8
  hollow output ISO EH7
  centre hole DIN 332, DR
- Flanges: spigot ISO h7

Precautions

Check that the unit to be put into service is rightly sized to perform the required function and that its mounting position complies with the order. Such data are shown in the nameplate fitted on the unit.

Check mounting stability so that the unit operates without vibrations or overloads, or insert damping couplings or torque limiters.

Care must be taken to ensure exact positioning and steadiness when handling the units to not origin damages to normal operation of the unit.

When hoisting, use relevant locations of the housing or eyebolts if provided, or foot or flange holes.

Never hoist on any moving part (input or output shafts).

Groundwork

Clean carefully all the surfaces of shafts and flanges paying attention that the used product for cleaning does not came in contact with sealing lips of oil seals to avoid any damage and lubricant leakages.

Set up

The unit may be connected for clockwise or counter-clockwise rotation.

Stop immediately the unit when unexpected running or noise occurs: if the part originating the anomaly is not identified, other parts may be damaged with consequent difficulty in going back to the cause.

Pulleys, Pinions, Couplings

Bore tolerance F7 is recommended when fitting pulleys, pinions, couplings, etc. on the output shaft.

It is also recommended to not fit or extract with mallets or hammer hits to not damaging internal parts, but to use the shaft-head threaded bore as reaction to fitting or extraction.

- Belt drives: the force imposed on the shaft due to belt tension to not exceed the maximum permissible radial force of the unit.
- Chain drives: properly lubricate the chain drive and check that no pitch differences hinder its smooth running.

Torque arm

The torque arm Type BR (Series RS) or Type BT (Series RT) can rotate by 45° within the arc 45° to 315°.

The types BRV (Series RS) and Type BTV (Series RT) incorporate a Vulkollan® bush to allow vibration dumping.

Painting

Carefully protect oil seals, coupling faces and shafts when re-painting the units.

Starting

Series RS, RT

A worm gearbox originates different rotations of output shaft with reference to wormshaft position onto the mating gear

wormshaft upwards

- one-stage gearboxes (RS, RT) - inverse rotation
- helical/worm gearboxes (RA, TA) - original rotation
- two-stage gearboxes (RS/RS, RT/RT) - inverse rotation

wormshaft downwards

opposite rotations

Series RC, RD, RN, RO/RV, RP, XA, VR, VS

- odd stage No. (1, 3, etc.) - inverse rotation
- even stage No. (2, 4 …) - original rotation
- VR and VS variators - original rotation

Inspections and Maintenance

Intervals

Although the units are no-load run tested in the factory before despatch, it is advisable not to run them at maximum load for the first 20-30 hours to allow proper running in.

For variators, run throughout the full speed range at reduced load before the full load is applied.

The units are delivered already filled with synthetic long-life oil: no servicing or refilling within the average lifetime of 15,000 hours for operation according to SF1.0.

Refer to the Catalogues as appropriate to the right definition of Service Factor.

Variators Series VR run dry and bearings are lifetime grease packed; therefore, there is no part needing periodical maintenance, the friction ring replacement excepted on normal wearing conditions. .

Maintenance Servicing

Units supplied without any oil plugs:		Units supplied with oil plugs:
Series RC	(sizes 05, 10, 20, 30)	
Series RD	(sizes 0, 1, 2, 3, 4, 5, 6)	
Series RG	(sizes 05, 07, 09, 12)	
Series RN	(sizes 1, 2, 3, 4, 5, 6)	
Series RO	(sizes 1, 2, 3, 4, 5, 6)	
Series RV	(sizes 1, 2, 3, 4, 5, 6)	
Series RP	(size 71)	
Series RS	(sizes 28, 40, 50, 60, 70, 85)	
Series RT	(sizes 28, 40, 50, 60, 70, 85, 110)	
Series XA	(sizes 63, 71, 80, 100)	
Series VR	(sizes 63, 71, 80, 90)	
Series RC	(sizes 40, 50, 60)	
Series RS	(sizes 110, 130, 150)	
Series VS	(sizes 63, 71, 80, 90, 100, 112)	

Periodically check the seal condition and possible evidence of lubricant leakages.
If lubricant replacement or topping is required, do not mix synthetic lubricants with mineral based lubricants.
According to working conditions: Eliminate all dust accumulation thicker than 5 mm by means of a vacuum cleaner.

- GEARBOXES
  - ◊ Every 500 working hours or every month - Oil seal visual check to monitoring any lubricant leakage
  - ◊ Every 3000 working hours or every 6 months - Oil seal check and replacement if considerably used
  - ◊ Every 5 years - Replace synthetic oil

- VARIATORS

  Series VR

  Clean the cone/ring contact surface with solvent or similar product.
  Variation section, dry running and with lifetime grease-packed bearings, does not require any periodic servicing, the friction ring replacement on normal wearing conditions excepted.
  - ◊ According to working conditions - Replace friction ring, if considerably used
  - ◊ Every 3000 working hours or 6 months - Check output shaft angular play and oil seal and corrugated hood integrity.
  - ◊ Every 6000 working hours or one year - Replace friction ring.

- VARIATORS
  Series VS
  Variation section is mineral oil lubricated
  and therefore it requires periodic servicing as follows
  ◊ Every 500 working hours or every month - Oil seal visual check to monitoring any lubricant leakage
  ◊ Every 3000 working hours or every 6 months - Oil seal check and replacement if considerably used
  ◊ Every 5 years - Replace mineral oil

Malfunctioning
Major Events

- Running noise, continuous
  ◊ Grinding sound: damaged bearing - Replace bearing & check the oil
  ◊ Knocking sound: irregular gearing - Contact Customer Service
- Running noise, intermittent
  ◊ Foreign particles in the oil - Contact Customer Service
  ◊ Series VR - Damaged friction ring - Rectify the cause and replace the friction ring at an authorized centre.
- Oil leakages
  ◊ Damaged oil seal - Replace the oil seal
  ◊ Loosen screws - Tighten the screws
  ◊ Inner overpressure - Contact Customer Service
  ◊ Oil seal fitting - Defective fitting or fitting-lubricant melting
- No rotation of output shaft
  ◊ Internal connection cut off - Contact Customer Service
  ◊ Series VR - Friction ring end of life - Replace the friction ring at an authorized centre.
  ◊ Series VR - Contaminated friction ring - Clean carefully cone and ring working areas with solvent of similar product
- Apparent oil leakage
  The presence of oil traces in the vicinity of the oil seal lip is a normal working condition due to the possible liquefaction of the lubricant applied for the installation of the oil seal.

  The lip of the oil seal is protected with special grease at the time of assembly to avoid, at the start, the shaft rotation without any lubricant interposed.

  During the operation and with the increase in the working temperature of the oil seal, the grease and its oily part are highlighted on the outside of the oil seal.

  This greasiness, as well as the lubricating film that is always present between the shaft and the oil seal, can be wrongly judged as a gearbox leakage of lubricant.

Customer Service
Always provide with the following information when addressing to the Customer Service:

- Full data of name plate and Serial No.
- Type of application
- Duty cycle
- Circumstances of malfunctioning
- Supposed causes.

.

Recommended types

All the units are delivered already filled with synthetic long-life oil.
The safe operation of the units with ISO VG 320 grade lubricant is recommended in the ambient temperature range

-20 e +55 °C (-4 e 131 °F)

Other temperatures require specific recommendations for lower or higher temperatures to ask the Customer Service.

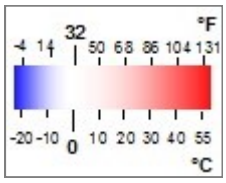

ISO	ARAL	bp	Castrol	EXXON	KLÜBER LUBRICATION
VG320*	Degol GS 320	Enersyn SG-XP320	Alphasyn PG 320	Glycolube 320	Klübersynth GH-6-320
VG320**	Eural Gear 320	- - -	Vitalube GS 320	Gear Oil FM 320	Klübersynth UH1-6-320

ISO	Mobil	TEXACO	TOTAL	Shell
VG320*	Glygoyle HE 320	Synlube CLP 320	Carter SY 320	Omala S4 WE 320
VG320**	Mobil DTE FM 320	---	Nevastane EP 320	---

* - Synthetic oil
** - Food Industry Approved Synthetic Oil

Lubricants

IUM

Helical gearboxes

RC

2c	[l_1]	[l_2]	[l_3]	3c	[l_1]	[l_2]	[l_3]	4c	[l_1]	[l_2]	[l_3]
RC205	0.13	0.15	0.15	RC305	0.17	0.30	0.30	RC405	0.21	0.40	0.40
RC210	0.17	0.25	0.17	RC310	0.25	0.50	0.35	RC410	0.35	0.70	0.50
RC220	0.50	0.60	0.50	RC320	0.60	0.80	0.60	RC420	0.85	1.10	0.85
RC230	0.70	1.15	0.80	RC330	1.15	1.50	1.15	RC430	1.25	1.60	1.25
RC240	1.15	2.25	2.00	RC340	1.50	3.00	2.25	RC440	2.75	5.00	3.50
RC250	2.25	4.40	4.00	RC350	3.75	6.00	5.00	RC450	6.50	10.0	8.00
RC260	6.00	8.80	8.00	RC360	8.00	10.0	8.80	RC460	12.0	15.0	13.5
2c - Two stages				3c - Three stages				4c - Four stages			

[l_1] = B3, B6, B7, B8, B5 [l_2] = V1, V5 [l_3] = V3, V6

RD

2c	[l] H	[l] V	3c	[l] H	[l] V
RD02	0.20	0.28	RD03	0.30	0.38
RD12	0.50	0.70	RD13	0.50	0.70
RD22	0.80	1.00	RD23	0.80	1.00
RD32	1.30	1.80	RD33	1.60	2.10
RD42	2.20	3.00	RD43	2.20	3.40
RD52	4.50	5.50	RD53	4.50	6,.50
RD62	7.00	9.00	RD63	7.00	11.00
2c - Two stages			3c - Three stages		

H = H1, H2, H3, H4 V = V5, V6

RP

FRP	71 H	71 V	90	680
Olio	0.05	0.10	* 50 g	0.04
1c - Single stage				

* Shell Grease Gadus S5 V142W 00 [grams]

XA

FXA	[l]
63	0.04
71	0.05
80	0.10
100	0.20
1c - Single stage	

Oil quantity [l] = litres

Worm gearboxes

RS

RS	[l]
28	0.03
40	0.08
50	0.13
60	0.20
70	0.35
85	0.60
110	1.50
130	2.75
150	4.40

[l] - Litres FRS

RA	[l_1 / l_2]
63 / 40	0.04 / 0.08
63 / 50	0.04 / 0.13
63 / 60	0.04 / 0.20
71 / 50	0.06 / 0.13
71 / 60	0.06 / 0.20
71 / 70	0.06 / 0.35
71 / 85	0.06 / 0.60
80 / 60	0.10 / 0.20
80 / 70	0.10 / 0.35
80 / 85	0.10 / 0.60
80 / 110	0.10 / 1.50
100 / 110	0.20 / 1.50
100 / 130	0.20 / 2.75
100 / 150	0.20 / 4.40

[l_1 / l_2] - Litres FXA / FRS

RS / RS	[l_3 / l_4]
28 / 28	0.03 / 0.03
28 / 40	0.03 / 0.10
28 / 50	0.03 / 0.15
28 / 60	0.03 / 0.25
40 / 70	0.10 / 0.35
40 / 85	0.10 / 0.63
50 / 110	0.15 / 1.50
60 / 130	0.25 / 2.75
70 / 150	0.35 / 4.40

[l_3 / l_4] - Litres FRS / FRS

RT

RT	[l]
28	0.03
40	0.08
50	0.13
60	0.20
70	0.35
85	0.60
110	1.50

[l] - Litres FRT

TA	[l_1 / l_2]
63 / 40	0.04 / 0.08
63 / 50	0.04 / 0.13
63 / 60	0.04 / 0.20
71 / 50	0.06 / 0.13
71 / 60	0.06 / 0.20
71 / 70	0.06 / 0.35
71 / 85	0.06 / 0.60
80 / 60	0.10 / 0.20
80 / 70	0.10 / 0.35
80 / 85	0.10 / 0.60
80 / 110	0.10 / 1.50
100 / 110	0.20 / 1.50

[l_1 / l_2] - Litres FTA / FRT

RT / RT	[l_3 / l_4]
28 / 28	0.03 / 0.03
28 / 40	0.03 / 0.08
28 / 50	0.03 / 0.13
28 / 60	0.03 / 0.20
40 / 70	0.08 / 0.35
40 / 85	0.08 / 0.60
50 / 110	0.13 / 1.50

[l_3 / l_4] - Litres FRT / FRT

Oil quantity [l] = litres

Parallel shaft, bevel-helical, planetary gearboxes

RN

RN-2	H1	H2	H3	H4	V1	V2	RN-3	H1	H2	H3	H4	V1	V2
12	0.5	0.6	0.4	0.6	0.6	0.6	13	0.5	0.4	0.3	0.4	0.6	0.4
22	0.6	0.7	0.5	0.7	0.7	0.7	23	0.6	0.5	0.4	0.5	0.7	0.5
32	1.1	1.3	0.8	1.3	1.2	1.2	33	1.2	1.0	0.6	1.0	1.2	1.0
42	2.8	1.8	1.2	1.8	2.7	2.7	43	2.5	1.5	0.9	1.5	2.2	1.9
52	5.1	3.2	2.1	3.2	4.9	4.9	53	5.0	2.8	1.6	2.8	4.0	3.4
62	9.2	5.8	3.8	5.8	8.8	8.8	63	9.0	5.0	2.9	5.0	7.2	6.1

RO
RV

RO-3	H1	H2	H3	H4	V1	V2	RV-3	H1	H2	H3	H4	V1	V2
13	0.6	0.6	0.6	0.6	0.7	0.7	13	0.6	0.5	0.4	0.5	0.6	0.6
23	0.9	0.7	0.9	0.7	1.0	1.0	23	0.9	0.6	0.5	0.6	0.7	0.7
33	1.5	1.2	1.4	1.2	1.7	1.7	33	1.5	1.0	0.8	1.0	1.2	1.2
43	2.8	2.0	1.6	2.0	2.5	2.5	43	2.9	1.9	1.2	1.8	2.6	2.6
53	5.1	3.6	2.9	3.6	5.0	5.0	53	5.2	3.4	2.1	3.2	4.7	4.7
63	9.2	6.5	5.2	6.5	9.0	9.0	63	9.4	6.1	3.8	5.8	8.5	8.5

RO-2	H1	H2	H3	H4	V1	V2
02	0.2	0.2	0.15	0.2	0.2	0.2
12	0.4	0.35	0.3	0.35	0.35	0.35
22	0.7	0.6	0.7	0.6	0.8	0.8
32	1.3	1.0	1.2	1.0	1.5	1.5

RG

RG	051	052	071	072	091	092	121	122
[g]	1	2	2	4	4	8	5	10

The reduced backlash planetary gearboxes are greased with long-life Klübersynth GE 46 Grease
Grease quantity [grams]

Oil quantity [l] = litres

Index

General Information

Directive relates not only to electrical equipment, but also to all kind of machines and control components, separately or jointly, for use in potentially explosive atmospheres.

The following recommendations, issued to operations in potentially explosive environment, are meant as specific completion to the preceding «Working Instructions».

VARVEL-ATEX gearboxes are manufactured with
- housings and covers of metallic material,
- the transmission elements fitted on ball and roller bearings,
- Viton oil seals on input and output shafts,
- the adequate oil quantity to assure the design operation.

VARVEL-ATEX gearbox selection to make on related catalogues by keeping a minimum SF1.2 Service Factor .

When selecting the gearbox, take into account the thermal power rating, where applicable.

Prevalent Use

VARVEL-ATEX gearboxes are identified as « components », fundamental but without any autonomous function to operate units and protection systems for production, transport, storage, measurement, control and conversion of energy, or the processing of materials which are capable of causing an explosion through their own potential source of ignition.

References

VARVEL-ATEX gearboxes are designed and produced according to Directive 2014/34/EU and to the following standards

- EN 1127-1: 2019 - Explosion prevention and explosion protection, Fundamental notions and methodology.

- EN ISO 80079-36:2016 - Explosive atmospheres - Part 36 - Not electrical devices for explosive atmospheres, Basic methods and required conditions.

- EN ISO 80079-36:2016 - Explosive atmospheres - Part 37 - Not electrical devices for explosive atmospheres. Not electrical protection type: for construction safety « c », for ignition source control « b », for immersion in liquid « k ».

Temperature

The units must be properly ventilated: check that ventilation temperature does not exceed 55 °C.

Measure housing temperature: after 2 hours from start up and check that the difference between measured temperature (between motor and gearbox, in the black dot position of sketch) and ambient temperature does not exceed the max. value of 80 °C.

For input free shaft gearboxes, temperature measurement to make also on gearbox front side (input side).

In such case, stop immediately the unit and call for Customer Service.

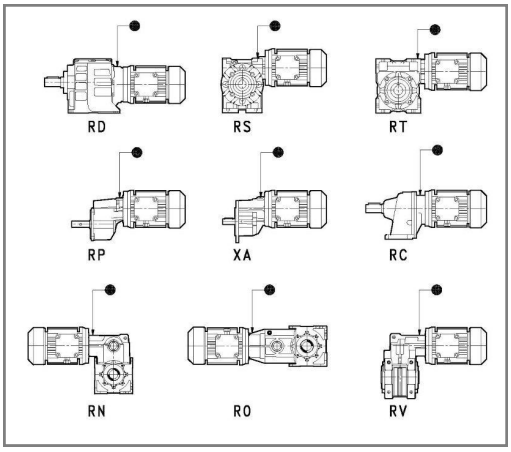

Safety Instructions

Electric motors and other elements to fit at the input or at the output of VARVEL-ATEX products, must be ATEX approved according the Directive 2014/34/EU.

Expected temperature limits of the products must comply with temperature classes and max. temperature.

VARVEL gearboxes must be installed and serviced according to installation and servicing standards for classified environments against explosion hazard because of gas or dust presence (e.g. EN 60079-14, EN 60079-17 and any other acknowledged national standard).

In case of combustible dusts, it is mandatory the regular cleaning to avoid any accumulation of dust layers on product surfaces.

It is imperative to earth the gearbox in case it is not coupled to an electric motor or installed on a metal surface.

If the motor is earthed, electrical continuity is ensured by the adapter between the motor and gearbox that is always of metallic material (steel, aluminium, cast iron).

It is the final responsibility of the installer to verify the electrical continuity between the engine and gearbox.

ATEX Marking

VARVEL Series RD, XA, RP, RS, RT, RN, RO-RV and RO2C conform to design requirements required by Group II, Category 2 and to operate in areas with explosion danger of gas (Zone 1 and Zone 2) and combustive dust (Zone 21 and Zone 22).

VARVEL-ATEX products are identified by the corresponding technical files, deposited at the Notified Body of Technical File Deposit, 0080 INERIS, F-60550 Verneuil-en-Halatte - France:

- Series RD - Series XA - Series RP **"ATEX 19 RD-XA-RP"**
- Series RS - Series RT **"ATEX 19 RS-RT"**
- Series RN - Series RO-RV - Series RO2C **"ATEX 19 RN-RO-RV-RO2C"**

and marked

CE Ex **II 2 G Ex h IIC T4 Gb IP66 T_{amb} -20 / +55°C**
II 2 D Ex h IIIC T135°C Db IP66 T_{amb} -20 / +55°C

where:

II	- Group II (surface industry)
2	- Category 2
G, D	- Explosive atmosphere (presence of gas-vapour-cloud, or dust)
Ex h	- Protection mode
IIC, IIIC	- Group (gas, or dust)
T4	- Temperature class (gas)
T 135°C	- Max. surface temperature (dust)
Gb, Db	- EPL - Explosion Protection Level (for gas, or dust)
IP66	- Gearbox protection grade
T_{amb}	- Ambient temperature (-20 / +55°C)

Materials, Zones, Categories, EPL

Materials	Zones	Categories			EPL (Equipment Protection Level)		
Gas, Vapours, Cloud	0	1G			Ga		
	1		2G			Gb	
	2			3G			Gc
Dust	20	1D			Da		
	21		2D			Db	
	22			3D			Dc

where:

Zones	0	Continuous presence of explosive gas
	1	Occasional presence of explosive gas
	2	Unlikely presence of explosive gas
	20	Continuous presence of explosive dust
	21	Occasional presence of explosive dust
	22	Unlikely presence of explosive dust
Categories	1	Devices with very high protection level (1G, 1D)
	2	Devices with high protection level (2G, 2D)
	3	Devices with normal protection level (3G, 3D)
EPL	a	Very high protection level (Ga, Da)
	b	High protection level (Gb, Db)
	c	Normal protection level (Gc, Dc)

Attention !

VARVEL-ATEX gearboxes

are not certified for operation in areas of **grey colour.**

Gas Temperature Class						
Group	T1 450 °C	T2 300 °C	T3 200 °C	T4 135 °C	T5 100 °C	T6 85 °C
I	*Natural gas (Firedamp)					
II A	Ethyl acetate Methyl acetate Acetone Acetic acid Methyl acid Ammonia Benzene Benzol Chlorine meth-ylene Chlorine ethylene Ethane Methane Methanol Carbon monoxide Naphthalene Propane Toluene Xylene	Butyl acetate Propyl acetate Amyl alcohol Ethyl alcohol Isobutyl alcohol Methyl alcohol n-butyl alcohol Acetic anhydride Cyclohexanone Liquefied petroleum gas Natural gas Isopropanol Mono amyl acetate n-Butane	Cyclohexane Cyclohexane Decano Heptane Hexane Gasoil Kerosene Naphtha Pentane Oil **	Acetaldehyde Ethylic ether		
II B	Coke gas Water gas	1.3-butadiene Ethyl benzene Ethylene Ethylene oxide	Hydrogen sulphide Isoprene Oil **	Ethylic ether		
II C	Hydrogen	Acetylene				Ethyl nitrate Carbon sulphide

** - According to chemical composition

Maintenance Servicing

Strict observance of maintenance intervals is recommended to ensure appropriate working conditions and explosion-proof protection.

- According to working conditions:
  Elimination of any dust accumulation thicker than 5 mm by a vacuum cleaner.
- Every 500 working hours or every month:
  Visual inspection of oil seals to monitor any lubricant leakage.
- Every 3000 working hours or every 6 months:
  Inspection of oil seals and replacement if worn-out.
- Every 5 years:
  Replacement of synthetic oil.

VARVEL SpA
Via 2 Agosto 1980, 9
I-40056 - Crespellano-Valsamoggia BO
Italy

dichiara sotto la propria responsabilità che il prodotto

declares on his own responsibility that the product

Riduttori
Gearboxes

Serie/s RS
Serie/s RT
Serie/s RD
Serie/s RP
Serie/s XA
Serie/s RN
Serie/s RO-RV
Serie/s RO2C

al quale questa dichiarazione si riferisce, è conforme alla Direttiva

to which this declaration relates to, complies with the Directive

2014/34/EU (ATEX).

La conformità è stata verificata sulla base dei requisiti delle norme o dei documenti normativi

The conformity is under observance of the standard documents

EN 1127-1: 2019
EN ISO 80079-36:2016
EN ISO 80079-37:2016

Modo di protezione:
Type of protection:

II 2 G Ex h IIC T4 Gb
II 2 D Ex h IIIC T135°C Db
IP66 T_{amb} -20/+55°C

I File Tecnici
sono depositati presso l'Organismo Notificato di deposito del fascicolo tecnico

The Technical Files
are deposited at the Notified Body of Technical File Deposit

ATEX 19 RS - RT
ATEX 19 RD - XA - RP,
ATEX 19 RN - RO - RV - RO2C

0080 INERIS,
F-60550 Verneuil-en-Halatte, France

Firma autorizzata - *Authorized Signature* .....

(Funzione - *Function*) .....

Luogo e data dell'emissione
Place and Date of Issue

Crespellano-Valsamoggia, ../../....

D01-IUM-STD-EN-ED01-REV09