OUR ENERGY – YOUR SUCCESS

Explosion proof 3DX motors

Installation and service instructions manual

IEC 80-355

BEVI

Every care has been taken to ensure the accuracy of the information contained in this publication.

Due to BEVI's policy of continuous development and improvement, BEVI reserves the right to supply products which may differ slightly from those illustrated and described in this manual.

Descriptions and technical features listed in this manual may not to be considered as binding. Under no circumstances should be considered as a contractual obligation.

The data in this manual may change without prior notice.

Contents

1. Introduction 4
1.1. Validity 4
1.2. Conformity....4

2. General descriptions....4

3. Before installation 7
3.1. Control at reception 7
3.2. Transportation and storage 7

4. General conditions 7
4.1. Site conditions....7
4.2. Electrical operating conditions 7
4.3. Construction features 7
4.4. Dimensions 8
4.4.1. Terminal box and thread for cable entries 8
4.4.2. Bearing information 9
4.4.3. Fastener 10

5. Installation and commissioning 11
5.1. Mounting 11
5.2. Connection to power supply 12
5.2.1. Insulation resistance test 12
5.2.2. Check before operation 12
5.3. Explosion protection features 13
5.3.1. General 13
5.3.2. Flameproof enclosure.... 13
5.3.3. Earthing.... 13
5.3.4. Flameproof parts 13
5.4. Connecting with power source....13
5.4.1. Terminal board with three terminals 13
5.4.2. Terminal board with six terminals 13
5.4.3. Connection of heaters and ptc..... 14
5.4.4. Connection of heaters and/or Pt-100 14
5.4.5. Rotation.... 14
5.4.6. Connections for different starting methods.... 14
5.4.7. Check before start 14
5.4.8. Attentions for Starting 15
5.5. Permissible radial loads on shaft with standard bearings 16
5.6. Permissible axial loads on shaft with standard ball bearings....17
5.6.1. Horizontal mounting.... 17
5.6.2. Vertical mounting shaft down..... 17
5.7. Shaft extension.... 18

6. Maintenance.... 19
6.1. General inspection.... 19
6.1.1. Monthly maintenance.... 19
6.1.2. Annual maintenance 19
6.2. Standby motors 20
6.3. Check bearings during operation 20
6.4. Lubrication.... 20
6.5. Notes for disassembling 21

7. Use at specific conditions.... 22
7.1. Auxiliary devices.... 22
7.1.1. Anti-condensation heaters 22
7.2. Motors supplied via inverters 22
7.2.1. Power output at inverter duty 22
7.3. Forced cooling IC416.... 22
7.4. Power for motors supplied via inverters ... 23
7.4.1. 2-pole motors.... 24
7.4.2. 4-pole motors.... 25
7.4.3. 6-pole motors.... 26
7.4.4. 8-pole motors.... 27
7.5. Warning about high ambient temperature 28
7.6. Output from motor during special ambient situations 28
7.6.1. Ambient temperature 28
7.6.2. Altitude 28
7.6.3. Different supply.... 28
7.6.4. Intermittent duty 28
7.7. Motor with cables permanently connected28
7.8. Paint for Group IIC motor intended for marine application 29

8. Special conditions – “X” 30

9. Trouble shooting 31

10. Exploded view.... 35

1. Introduction

First thank you very much for selecting the flameproof three phase induction motors supplied by BEVI. Before you run the motors, please read this Operation Instructions carefully, which tell you how to operate and maintain the motors to serve you better. Please contact BEVI without any hesitation if you have any questions.

WARNINGS

1. Read the Operation Instructions carefully before commission and run the motors.
2. All the fasteners must be tightened after motor is reassembled.
3. Personnel without Ex knowledge trained or without the skills prohibited to dismantle/assemble Ex motors and their components.
4. If the parts, components or kits must be replaced due to rustiness, damage or other means, please contact BEVI for them. Parts, components or kits from other sources are not allowed to use as replacements.

In terms of Directive 89/392/CEE low voltage motors are to be considered as components to be installed on machines. Commissioning is forbidden until the final product has been checked for conformity.

The information contained in this documentation is intended only for use by qualified personnel, who are familiar with the current rules and regulation in forces.

1.1. Validity

These instructions are valid for BEVI flameproof motors type 3DX. For limits for site conditions see 4.1 and for storage see 3.2. If ambient conditions exceed these limits, please contact BEVI for more information.

1.2. Conformity

As well as conforming to the standards relating to mechanical and electrical characteristics, motors designed for explosive atmospheres must also conform to one or more of the following European, IEC-standards as well as the China National Standards GB3836.1 and GB3836.2:

Product standards	
IEC 60079-0:2017 COR1:2020	Explosive atmospheres- Part 0: General requirement
IEC/EN 60079-1:2014 COR1:2018	Explosive atmospheres- Part 1: Equipment protection by flameproof enclosures ”d”

Table 1 - Product standards

2. General descriptions

3DX Flameproof three-phase induction motors can be used as drivers in the locations where explosive gas exists with temperature class T1-T4 and area zone 1 or zone 2.

The motors are designed and manufactured into flameproof type and the flameproof properties conform to above standards. The marks of explosion protection are Ex db IIB T4 Gb or Ex db IIC T4 Gb.

Example of classification of more common flammable gases and vapours usually encountered, and their temperature class are shown in Table 2 - Classification of the more common combustible gases and vapours according to temperature class and group.

The legible and durable raised sign "Ex" should be marked on the right top of nameplates and the distinct position of the enclosure of motors. The Ex-mark is also stamped on the nameplate, which consists also of type of protection, explosion group and temperature class.

Group	Temperature classes					
	T1	T2	T3	T4	T5	T6
I	Methane (firedamp)					
IIA	Acetic acid Acetone Ammonia Benzoyl Benzene Butanone Carbon monoxide Ethane Ethyl Acetate Ethyl Chloride Methane Methanol Methyl Acetate Methyl Alcohol Methyl Chloride Naphthalene Propane Toluene Xylene	Acetic anhydride I amyl acetate n butane n butyl alcohol Amylic alcohol Butyl acetate Cyclohexanone Ethyl alcohol Iso butylic alcohol Liquefied gas Natural gas Propyl acetate	Cyclohexane Cyclohexanol Decane Diesel fuels Gasoline Heating oil Heptane Hexane Jet fuels Pentane Petroleum[1]	Acetaldehyde Ether		
IIB	Coke-oven gas Water gas (carburetted)	1,3- butadiene Ethylene Ethylbenzene Ethylene oxide	Hydrogen sulphide Isoprene Petroleum*	Ethyl ether		
IIC	Hydrogen	Acetylene				Carbon disulphide Ethyl nitrate

[1]depending on composition

Table 2 - Classification of the more common combustible gases and vapours according to temperature class and group

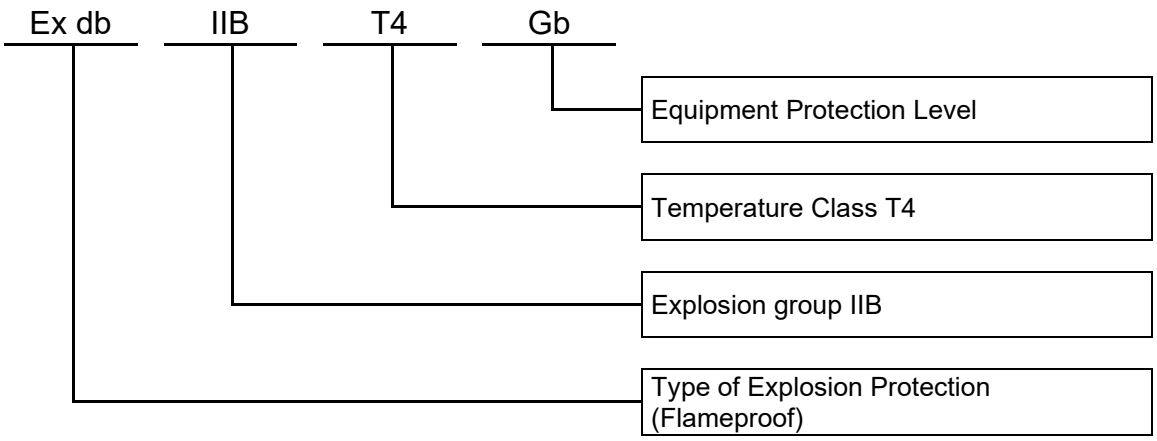

Table 3 - Protection type

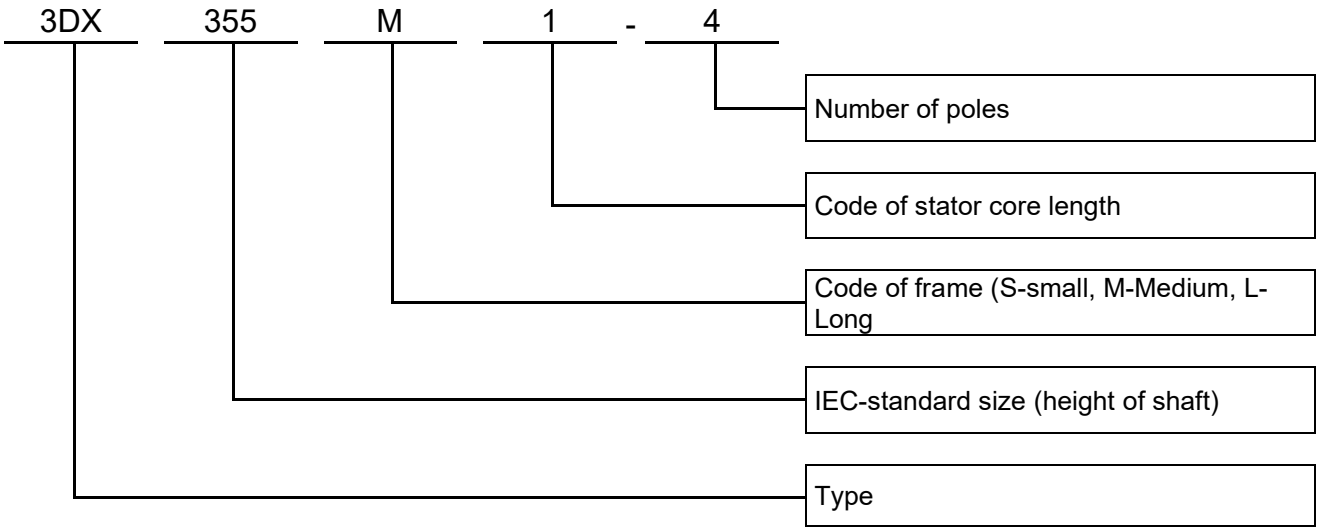

Table 4 - Explanation of type designation

3. Before installation

3.1. Control at reception

Immediately upon receipt, check the motor for external damage (e.g. shaft, shields, flanges and painted surfaces) and, if found, inform the forwarding agent without delay.

Check all rating plate data, especially voltage, winding connections (star or delta), category, type of protection and temperature class.

3.2. Transportation and storage

The motors can be forwarded in any covered transport means free of violent shocks or blows.

Motors fitted with cylindrical roller and/or angular contact bearings should have the shaft secured during transportation.

Example on that can be a shaft clamp.

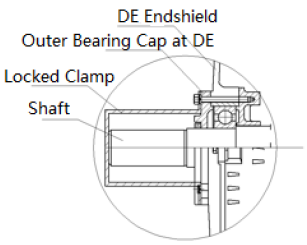

This clamp must be removed before starting the motor.

Lifting of motors should only be done through the lifting eye placed on the motor frame. Storage of motors can take place in rooms in which have:

- max relative humidity does not exceed 80 % at 20 °C
- ambient temperature ranges from -10 °C to +40 °C, non-condensing.
- there is no access of dusts, gases and caustic vapours as well as other corroding chemical fumes destructive to insulation or casing.
- no vibrations

In the stored motors, the machined unprotected surfaces (shaft ends and flanges) should be protected against atmospheric influences by coating them with thick grease or easily removable anticorrosive lacquer.

4. General conditions

4.1. Site conditions

- Ambient temperature within -20 °C - +40 °C.
- Altitude up to 1000m above sea level (asl)
- The maximum relative humidity 95% (when ambient at +25 °C).

4.2. Electrical operating conditions

Please check that the motor plate states the same voltage, frequency etc. as you have at your facilities before connecting the motor. Motors can be ordered as following:

Rated frequency: 50Hz or 60Hz

- The rated voltage: 220/380, 230/400, 240/415, 250/440, 265/460, 277/480, 440, 460, 480, 525, 575, 380/660, 400/690, 415/720, 660 or 690V. Dual or single voltage available.
- The standard duty type is S1 (continuous duty). The motors can also be used for intermittent duty or duty via inverter supply. Inverter duty is an option. If inverter duty the motor needs to be approved for it as well as cooling according to IC416 (forced ventilation). Please contact BEVI for details.
- The stator windings are of Class F insulation. Class H insulation is an option.

4.3. Construction features

- The degree of protection of motor enclosure is;
  - IP55 or IP65 for IIB
  - IP56 or IP66 for IIC
- The stator winding adopts Class F insulated polyester enamelled round copper wires. The complete winding and stator cores are vacuum-pressure-impregnated (VPI) to make them a solid integral. This process enables the winding to possess excellent electrical and mechanical properties, high moisture-resistant ability and thermal stability. The casted aluminium rotor is well balanced to make the motor run smoothly with little vibration.
- The basic mounting arrangements are B3, B35, B5, B14, B34 and V1. Other mounting arrangements can also be met.

- The cooling method adopts IC411 (totally enclosed self-fan cooled).
- The motors are provided with a cylindrical shaft extension and transmit by means of coupler or gear unit. When the gear is adopted, the pitch diameter should not be 3 times less than the diameter of motor shaft extension. Double shaft extensions or special shaft extensions can also be produced if required.
- The terminal box is located on the top of the motor. There are 3 terminals in the box for single voltage connection or 6 terminals for dual voltage connection. All cable entry devices and blanking elements shall be certified in a suitable type of explosion protection flameproof enclosure 'db' with an IP rating and Ex protection minimum equal to or above those for the motor, suitable for the conditions of use and correctly installed. Unused apertures shall be closed with suitable certified blanking elements.
- The explosion group for the motors are Ex db IIB T4 Gb or Ex db IIC T4 Gb
- There is a steel or brass screw inside the box for internal earthing. The cable entries are suitable for rubber insulated cables, conduits and explosion-proof flexible pipe (armoured cables).
- The protection degree of terminal boxes is IP55 or IP65 for Ex db IIB and IP56 or IP66 for Ex db IIC.

4.4. Dimensions

4.4.1. Terminal box and thread for cable entries

Size of terminal box	For frame size	Number of entry/entries for main supply	Cable gland for main supply	Cable gland for heater, ptc or Pt-100
M5 Small	80-100	1	M25×1.5	M20×1.5
M5	112	1	M25×1.5	M20×1.5
M5	132	1	M40×1.5	M20×1.5
M6	160-180	1	M40×1.5	M20×1.5
M8	200-225	1	M50×1.5	M20×1.5
M10	250-280	1	M63×1.5	M20×1.5
M10	250-280	2	M50×1.5	M20×1.5
M16	315	2	M63×1.5	M20×1.5
M16	355	2	M72×2	M20×1.5

Table 5 - Terminal box and thread for cable glands

Gland thread size	Clamping range	OD of thread AG	Length of thread GL	H	Wrench size
M16×1.5	6~12mm	16mm	15mm	29mm	26mm
M20×1.5	10~15mm	20mm	15mm	29.5mm	30mm
M25×1.5	14~18mm	25mm	15mm	29.5mm	34mm
M32×1.5	22~27mm	32mm	15mm	32mm	50mm
M40×1.5	26~33mm	40mm	15mm	32mm	55mm
M50×1.5	32~41mm	50mm	15mm	37mm	65mm
M63×1.5	48~57mm	63mm	20mm	38mm	80mm

Table 6 - Cable glands

4.4.2. Bearing information

Frame size	Pole	Bearing	
		DE-side	NDE-side
80	2,4,6,8	6204-2RZ/C3	6204-2RZ/C3
90	2,4,6,8	6205-2RZ/C3	6205-2RZ/C3
100	2,4,6,8	6206-2RZ/C3	6206-2RZ/C3
112	2,4,6,8	6206-2RZ/C3	6206-2RZ/C3
132	2,4,6,8	6208-2RZ/C3	6208-2RZ/C3
160 (IIB)	2	6209/C3	6209/C3
160 (IIB)	4,6,8	6309/C3	6209/C3
160 (IIC)	2	6209-2RZ/C3	6209-2RZ/C3
160 (IIC)	4,6,8	6209-2RZ/C3	6209-2RZ/C3
180	2,4,6,8	6311/C3	6211/C3
200	2	6212/C3	6212/C3
200	4,6,8	6312/C3	6212/C3
225	2	6312/C3	6312/C3
225	4,6,8	6313/C3	6312/C3
250	2	6313/C3	6313/C3
250	4,6,8	6314/C3	6313/C3
280	2	6314/C3	6314/C3
280	4,6,8	6317/C3	6314/C3
315	2	6316/C3	6316/C3
315	4,6,8,10	6319/C3	6319/C3
355	2	6319/C3	6319/C3
355	4,6,8,10	6322/C3	6319/C3

Table 7- Bearings

Note that for size 160 the bearings are different for Ex db IIB and Ex db IIC.

For the rest of the sizes the bearings are same for Ex db IIB and Ex db IIC.

4.4.3. Fastener

The yield stress for all fasteners ≥ 640MPa. The specifications for fasteners see below table.

Frame size	End shield	Outer bearing cover	Terminal box	Lid	Material	Performance level	Minimum tensile strength MPa	Minimum yield strength MPa
80	M6	-	M8	M6	Carbon steel	8.8	800	640
90	M6	-	M8	M6	Carbon steel	8.8	800	640
100	M8	-	M8	M6	Carbon steel	8.8	800	640
112	M8	-	M8	M6	Carbon steel	8.8	800	640
132	M10	-	M8	M6	Carbon steel	8.8	800	640
160	M10	M6	M10	M8	Carbon steel	8.8	800	640
180	M12	M8	M10	M8	Carbon steel	8.8	800	640
200	M12	M8	M12	M8	Carbon steel	8.8	800	640
225	M12	M10	M12	M8	Carbon steel	8.8	800	640
250	M16	M10	M16	M8	Carbon steel	8.8	800	640
280	M16	M10	M16	M8	Carbon steel	8.8	800	640
315	M16	M10	M16	M8	Carbon steel	8.8	800	640
355	M16	M10	M16	M8	Carbon steel	8.8	800	640

Table 8 - Fasteners

5. Installation and commissioning

5.1. Mounting

The rotor is dynamically balanced. The balancing has been done with a half key fitted to the shaft, according to IEC 60034-14. This means that, in order to avoid vibrations, coupling halves and pulleys shall be balanced with a half key, after the making of the keyway.

Before setting up the motor on site:

- remove bearing protections (if such are provided)
- check motor for possible mechanical transport or storage damages
- measure insulation resistance to frame: The lowest insulation resistance, at a winding temperature of approx. 20 °C, should be >1 MΩ for size 80-180 and >5MΩ for size 200-355 (greater than 100 MΩ is recommended before start-up of motor). If the measured insulation resistance is lower, the motor has to be subjected to drying. During the drying process, the conditions should be such that the humidity is removed from the windings, i.e. at least the terminal box cover must be removed to facilitate the air exchange within the motor. The drying temperature must not exceed 100 °C.
- For motors with greaseable bearings the grease quality shall be checked when the motors have been stored for a period longer than 1,5 years. In such case it is best to change the grease using the grease stated in Table 13 - Lubrications of bearings. It is also possible to use equivalents of these greases. When changing the grease grade the bearings are to be washed with a proper bearing cleaning liquid and dried thoroughly.

On the site the motor is to be set up so as to ensure an easy access in case of inspection and maintenance.

A flexible coupling or pulley thoroughly balanced with half key is to be fitted onto the shaft end´s shaft neck, as follows:

- remove protective varnish from the shaft neck,
- apply a thin layer of grease or oil on the cleaned shaft neck
- warm the coupling half or sheave up to approx. 85 °C and with a suitable washer and bolt, using the threaded hole in the shaft end shaft neck or an appropriate jig, fit the coupling or sheave onto the shaft end shaft neck. Do not use a hammer as it may damage the motor bearings.

The installed motor shaft centre line may show a misalignment of up to 0,1 mm with respect to that of the driven machine shaft. A clearance of min. 1 mm must be allowed between the coupling halves.

In belt drives excessive tensioning of belt is to be avoided as it leads to reduced lifetime of bearings and the overloading of shaft.

Secure the cooling of motor by controlling the distance between fan cowl and closest wall. It must be 11-125 mm depending on motor size. Recommended distance from end of the fan cover to nearest wall is ≥ ¼ of the fan cover diameter.

5.2. Connection to power supply

Before connecting the motor to power supply compare the data in the rating plate with the mains voltage.

The designation of terminals and winding connection is given on the plate with connection diagram provided inside the terminal box cover. The motor must be installed in accordance with the generally in force principles and regulations, and must be installed by a qualified electrician

5.2.1. Insulation resistance test

Measure insulation resistance before commissioning and when winding dampness is suspected.

Insulation resistance, corrected to 20 °C, may not in any cases be below $3 \times U_N/1000$ MΩ (U_N: rated voltage in V), otherwise the motor must be dried until the insulation resistance achieves the specified value (measured with 500 or 1000 VDC). The insulation resistance value is halved for each 20 °C increase in temperature.

If the reference resistance value is not attained, the winding is too damp and must be oven dried. The oven temperature should be 90 °C for 12–16 hours followed by 100 °C for 6–8 hours.

If fitted, drain plugs must be removed and closing valves must be opened during heating. After heating, make sure the drain plugs are refitted. Even if the drain plugs are fitted, it is recommended to disassemble the end shields and terminal box covers for the drying process.

Windings drenched in seawater normally need to be rewound.

5.2.2. Check before operation

The following points must be observed before installing flameproof motors. No operation is allowed if any one of these points is unsatisfactory.

- The sign “Ex”, the certificate number and CE mark must have been attached to the motor. Check whether the mark of explosion protection matches the explosion gas atmosphere where the motor is intended to be use;
- All the bolts are tightened, and spring washers are present. All parts of the flameproof enclosure are connected properly;
- No cracks or defects affecting the flameproof property could be found on all the flameproof parts (For the new motor having not been used, this item can be omitted.);
- For the motor with re-greasing device, the grease replenish pipes shall be unblocked;
- For the motor with bearing temperature detector, after the device being set up, be sure that its flexible cord shall not touch the fan to prevent the motor from accident.
- For motors intended to work in hazardous areas Ex db the motor type and temperature classification must comply with the area rating.
- If there is a “X” on the motor plate near to the certificate number, it is necessary to check on the certificate which additional conditions are required for proper working. See 8 Special conditions – “X”.
- During installation, care must be exercised in lining up, as misalignment can be detrimental to bearings and shaft of both the motor and driven equipment. Check whether the coupler or screw and pin on gear is fastened, the unit runs smoothly, or if abnormal movement and noise are present. If abnormal movement and noise; check whether the fastening bolts are tightened firmly or the bearings are short of grease.
- For the variable-frequency motors which are forced ventilated (IC416) and have B5 arrangement, appropriate support devices should be employed to reinforce mounting rigidity.
- Check whether the protective devices conform to the requirements and they are installed firmly and reliably.
- Check whether the control device is connected properly, whether it runs smoothly, whether the contactors are in good condition and whether the metal enclosure of the driven machine has been earthed.
- Check whether three-phase power supply voltage is normal. No phenomenon of overvoltage, undervoltage or asymmetry of three phase voltage are present.
- Check bearing and lubrication system to see whether the grease in bearings is dirty or dried. The grease should be cleaned away and replenished as required if necessary.

5.3. Explosion protection features

5.3.1. General

3DX series motors are so designed in mechanical construction that should the explosive mixture in the service locations, invaded the inside the motors and be ignited, the flameproof enclosures are capable of preventing the ignition of explosive mixtures surrounding the enclosure. The flameproof properties are determined by the enclosure strength, the gap, diameter difference and length of flameproof joint surfaces of the parts of the enclosure, as well as the maximum allowable surface temperature of the enclosure.

5.3.2. Flameproof enclosure

In order to ensure flameproof properties of the enclosure, the fixing bolts are equipped with locking gaskets to protect them from loosening.

5.3.3. Earthing

There is one earthing terminal inside the terminal box and one external outside the motor body.

The external earthing bolt is located on the distinct position of the enclosure with earthing symbol. ⏚

5.3.4. Flameproof parts

Flameproof parts are composed of enclosure, the end shields, the shaft (rotor), the inner bearing cap, the complete terminal box, the fixing bolts and the sealing shims.

5.4. Connecting with power source

The terminal box is located on the top of the motor and can be turned 90°.

The cable glands and the terminal box are connected together horizontally and the cables can be brought out in a horizontal level on the other side. The power cables should be correctly selected according to motor's current and service conditions.

5.4.1. Terminal board with three terminals

For the terminal box with three terminals with separate marks U, V and W, the connection diagram is shown in Figure 1 - Connection with three terminals

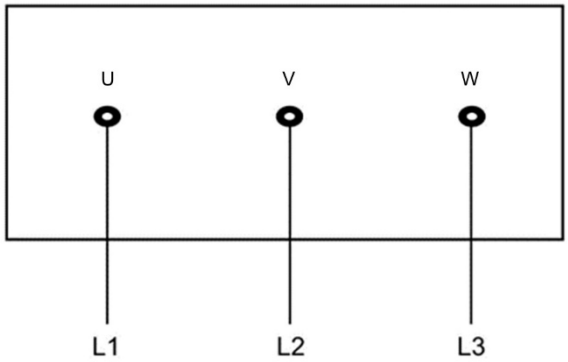

Figure 1 - Connection with three terminals

5.4.2. Terminal board with six terminals

The connection can be changed by swapping the connecting lugs according to the voltage requirement. The terminals are marked separately with U1, U2, V1, V2, W1 and W2. They are connected according to the voltage specified on the nameplate. The connecting diagram is shown in Figure 2 - Connection with six terminals

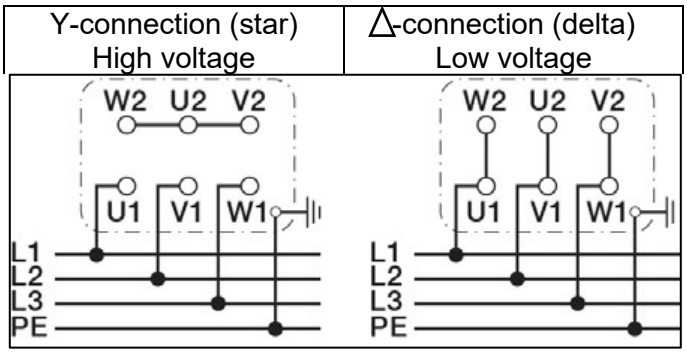

Figure 2 - Connection with six terminals

5.4.3. Connection of heaters and ptc

For the stator winding with temperature-detector and space heater, the lead cables of such devices can be connected either in the main terminal box or in a separate terminal box. The connection diagrams are shown in Figure 3 - Connection for heaters and

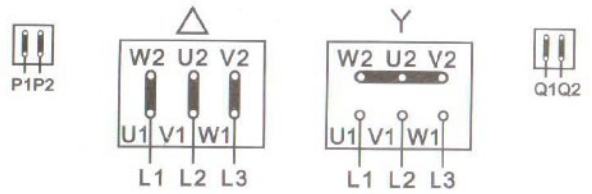

P1 & P2: Connectors for ptc in winding

Q1 & Q2: Connectors for heaters

Figure 3 - Connection for heaters and ptc

5.4.4. Connection of heaters and/or Pt-100

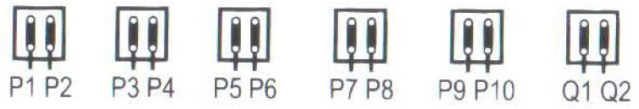

Figure 4 - Connection for heaters and Pt-100

P1P2, P3P4, P5P6:
Connectors for Pt-100 for stator winding

P7P8: Connectors for Pt-100 for DE Bearing

P9P10: Connectors for Pt-100 for NDE Bearing

Q1 & Q2: Connectors for Heater
(provided in terminal box or auxiliary box)

Recommended voltage supply for thermistors is 2,5-7,5VDC. The maximum measuring voltage for the thermistors is 30VDC. The maximum measuring current for Pt-100 is 5 mA. Using a higher measuring voltage or current may cause errors in readings or a damaged temperature detector.

5.4.5. Rotation

Clockwise rotation will be viewed from the drive end if the motor's phase sequence U, V, W corresponds to the power phase sequence L1, L2, L3 or else vice versa. If the rotation direction is different from the required one, swap any two power phase sequences to achieve the correct rotation direction.

5.4.6. Connections for different starting methods

The terminal box on single speed motors normally contains a terminal block with six winding terminals and at least one separate earth terminal. This enables the use of DOL- or Y/D -starting. See Figure 2 - Connection with six terminals

For special motors, the terminal connection must follow the instructions inside the terminal box.

The voltage and connection are stamped on the motor plate.

Direct-on-line starting (DOL):

Y or D winding connections may be used.

For example, 690 VY, 400 VD indicates Y-connection for 690 V and D-connection for 400 V.

Star/Delta (Y/D) start method:

The supply voltage of the motor must be equal to the rated voltage when using a D-connection. Remove all connection straps from the terminal block.

5.4.7. Check before start

All motors for explosive atmospheres must be protected against overloads, see installation standards IEC/EN 60079-14 and local installation requirements.

- When connecting, the cores of cables should be set with spring washer, flat washer and cable lug or between two arc washers or two strap clamps.
- The earthing cable should be set with spring washer, flat washer and cable lug or between two arc washers to the earthing bolt and be earthed reliably in order to ensure that electric contact and clearance conforms to the requirement.
- After finishing connection, check whether there is any substance or dust in the box and whether the connection conforms to supply voltage and data specified on the nameplate. The terminal box cover shall not be fastened until everything is correct.
- The cable brought into the box must be fixed in the gland by clamping plate to prevent the cable from being pulled out.
- The external ground bolt should be earthed reliably. Check the effectiveness of earthing
- Check, whether a free cooling air intake to the fan is ensured.

- For the motors with specified rotation direction, the rotation direction should be conformed before starting operation to the direction of the arrow in the indication plate.
- After finishing connection, the motor shall be energized to carry out a no-load test. For the motors provided with forced ventilation the motor for forced ventilation shall be started first. When stop, the main motor shall be stopped before the forced ventilation. During start, observe whether any abnormal phenomenon appears or not. The motor can operate at load only after it operates normally at no load.
- Whenever the motor operates either at no load or at load, intermittent or abnormal noise or vibration shall not be present.
- Check the electrical installation, the circuit breaker, measuring instruments and other auxiliary and protection equipment for correct operation,

5.4.8. Attentions for Starting

- Remove clamp or similar attachment that are used for fixing the shaft during transportation.
- After energizing, if the motor does not run, de-energize it immediately to avoid burning. Check the motor and solve the problem then re-start it.
- When the motor is started at reduced voltage, it must be at no-load or low load. It is only allowed to start the motor twice at cold and once at hot per hour.
- Carry out a test run. During test run of the set, check:
    - line voltage,
    - current,
    - motor revolutions sense,
    - effectiveness of motor cooling and correct coupling with driven machine,
    - whether abnormal vibrations or other malfunctions of the motor are present,
    - temperature rises of respective motor elements, such as bearing shields, bearings, frame.
    - starting-up equipment elements, control and protection gears, for correct operation.
    - electrical parameters attained by the motor and evaluate the correctness of motor type selection.

After reaching operating temperature, it is recommended to tighten all electrical connections once more.

If the motor operates under conditions where vibrations are inevitable, the electrical connection should be checked regularly and be made with cables with multi stranded cores. After the above recommended procedures are accomplished and correct operation of the drive motor and driven machine is attained, the motor may be regarded as commissioned after installation.

5.5. Permissible radial loads on shaft with standard bearings

The below shaft loads are calculated on the bases of ambient +25°C, rated frequency 50Hz and bearing life of 20000h/40000h. The mounting arrangement is B3 and with horizontal force. In some cases, shaft strength may affect the allowable force. When motor runs at 60Hz, the allowable shaft load shall be reduced by 10%.

If radial force is applied at F_R, between X_0 to X_{max}, the allowable force at F_R calculates by;

$F_R = Fx_o - X/E \ (F_{xo} - F_{xmax})$

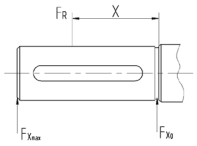

Frame	Poles	Standard shaft length E	Permissible radial load (N)							
			Ball Bearing 20,000h		Ball Bearing 40,000h		Roller Bearing 20,000h		Roller Bearing 40,000h	
		(mm)	X_0	X_{max}	X_0	X_{max}	X_0	X_{max}	X_0	X_{max}
80	2	40	620	520	558	474	-	-	-	-
	4	40	620	520	558	474	-	-	-	-
	6	40	710	490	639	540	-	-	-	-
	8	40	780	650	700	595	-	-	-	-
90	2	50	710	590	640	545	-	-	-	-
	4	50	700	580	630	535	-	-	-	-
	6	50	800	660	720	610	-	-	-	-
	8	50	890	730	800	680	-	-	-	-
100	2	60	980	780	880	750	-	-	-	-
	4	60	970	760	870	740	-	-	-	-
	6	60	1100	900	990	840	-	-	-	-
	8	60	1200	980	1080	920	-	-	-	-
112	2	60	1380	1140	1170	940	-	-	-	-
	4	60	1370	1130	1160	930	-	-	-	-
	6	60	1580	1310	1340	1075	-	-	-	-
	8	60	1750	1450	1490	1190	-	-	-	-
132	2	80	1940	1720	1640	1400	-	-	-	-
	4	80	1920	1700	1610	1370	-	-	-	-
	6	80	2100	1900	1800	1490	-	-	-	-
	8	80	2300	2100	1850	1560	-	-	-	-
160	2	110	2700	2170	2200	1750	5520	4480	4450	3550
	4	110	2670	2100	2190	1740	5685	4615	4550	3690
	6	110	3030	2400	2485	1965	5795	4705	4640	3750
	8	110	3310	2650	2655	2150	5850	4750	4680	3700
180	2	110	3400	2950	2750	2400	5900	4900	4750	3950
	4	110	3950	3255	3170	2600	7600	5100	6300	5200
	6	110	4200	3300	3355	2655	8400	5200	6900	5270
	8	110	4385	3500	3470	2770	8800	6000	7255	5300
200	2	110	4100	3600	3480	3060	8800	6900	7480	5860
	4	110	4500	4100	3800	3600	10000	8500	8900	7480
	6	110	5200	4920	4420	4190	10300	8750	9060	7440
	8	110	5400	4980	4590	4230	10800	8800	9180	7480
225	2	110	5400	4550	4590	3870	11500	9420	9775	8000
	4	140	5250	4400	4470	3750	12400	10000	10500	8500
	6	140	5850	5100	4950	4400	12900	10400	10970	8850
	8	140	6300	5600	5350	4760	13020	10580	11000	9000
250	2	140	5300	4600	4500	3950	13860	11340	12800	10900
	4	140	5600	4400	4760	3750	15950	13050	15000	12785
	6	140	5750	5100	4600	4080	16500	13500	15400	12800
	8	140	6370	5600	5400	4480	16665	13800	15300	12800
280	2	140	5000	4000	4500	3700	14000	11600	12500	9800
	4	140	6265	5235	5625	4700	16900	14050	15200	12600
	6	140	7530	6270	6750	5650	17500	14500	15700	13000
	8	140	8650	7080	7780	6380	19150	14635	17200	13170
315	2	140	6800	5800	5440	4930	13600	11160	11560	9400
	4	170	8090	6805	6875	5785	25750	21250	21800	18062
	6	170	9030	7570	7675	6435	28500	23500	24200	19980
	8	170	9900	8300	8400	7055	31800	26200	27000	22200
355	2	140	7350	6450	5750	5050	18600	15600	15810	13000
	4	210	-	-	-	-	40500	32000	31900	25000
	6	210	-	-	-	-	42400	33000	33700	27000
	8	210	-	-	-	-	46000	36000	42500	31700

Table 9 - Permissible radial loads

5.6. Permissible axial loads on shaft with standard ball bearings

The below shaft loads are calculated on the bases of ambient +25℃, 0 radial force, rated frequency 50Hz and bearing life of 20000h/40000h. When motor runs at 60Hz, the allowable shaft load shall be reduced by 10%.

For horizontal mounting, (B3)

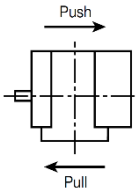

For vertical mounting shaft down, (V1)

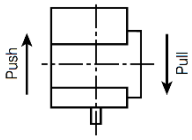

5.6.1. Horizontal mounting

Frame	Permissible axial load (N)															
	Duty time 20.000 h								Duty time 40.000h							
	2P		4P		6P		8P		2P		4P		6P		8P	
	Push	Pull	Push	Pull	Push	Pull	Push	Pull	Push	Pull	Push	Pull	Push	Pull	Push	Pull
80	380	380	380	380	440	440	500	500	304	304	304	304	352	352	400	400
90	400	400	400	400	480	480	540	540	320	320	320	320	384	384	432	432
100	560	560	560	560	660	660	740	740	448	448	448	448	528	528	592	592
112	820	820	820	820	960	960	1080	1080	656	656	656	656	768	768	864	864
132	1180	1180	1180	1180	1380	1380	1560	1560	944	944	944	944	1104	1104	1248	1248
160	2138	2138	2588	2588	2768	2768	3116	3116	1744	1744	2081	2081	2228	2228	2486	2486
180	2475	2475	2700	2700	3105	3105	3165	3165	2025	2025	2190	2190	2490	2490	2520	2520
200	3345	3345	3750	3945	3750	4395	3750	4410	2730	2730	3195	3195	3540	3540	3525	3525
225	3735	3735	3750	4560	3750	4890	3750	5565	3045	3045	3690	3690	3750	3945	3750	4470
250	4500	4560	4500	5355	4500	5910	4500	6150	3690	3690	4365	4365	4500	4785	4500	4950
280	4650	3189	6000	4500	5438	6938	7725	6225	3675	2175	4688	3188	5363	3863	5963	4463
315	4635	3150	7050	5550	8175	6675	9000	7500	3638	2136	5438	3938	6263	4763	6900	5250
355	2288	5138	3200	4650	3900	5363	4550	6000	1313	4163	2210	3675	2775	4125	3213	4663

Table 10 - Load horizontal

5.6.2. Vertical mounting shaft down

Frame	Permissible axial load (N)															
	Duty time 20.000 h								Duty time 40.000h							
	2P		4P		6P		8P		2P		4P		6P		8P	
	Push	Pull	Push	Pull	Push	Pull	Push	Pull	Push	Pull	Push	Pull	Push	Pull	Push	Pull
80	340	340	320	320	380	380	440	440	272	272	256	256	304	304	352	352
90	340	340	320	320	380	380	440	440	272	272	256	256	304	304	352	352
100	460	460	440	440	520	520	600	600	368	368	352	352	416	416	480	480
112	660	660	640	640	740	740	860	860	528	528	512	512	592	592	688	688
132	860	860	760	760	940	940	1120	1120	688	688	608	608	752	752	896	896
160	2170	1805	2674	2205	2870	2387	3108	2692	1799	1434	2184	1715	2324	1845	2548	2132
180	2562	2058	2912	2205	3360	2573	3472	2618	2142	1638	2422	1715	2758	1971	2828	1974
200	3500	2776	3500	3276	3500	3686	3500	3637	2940	2188	3500	2548	3500	2846	3500	2769
225	3500	3063	3500	3812	3500	4015	3500	4575	3346	2419	3500	2958	3500	3077	3500	3567
250	4200	3742	4200	4410	4200	4865	4200	4988	4088	2958	4200	3444	4200	3745	4200	3770
280	5285	2205	6720	3185	7805	3850	8540	4900	4340	1260	5460	1925	6300	2345	6895	3290
315	5565	1820	8225	3850	9520	4410	10745	5530	4620	910	6685	2310	7735	2625	8715	3500
355	4445	2975	4675	3020	5455	3306	6145	4350	1765	1030	3615	2095	4345	2189	4720	3130

Table 11- Load vertical mounting shaft down

5.7. Shaft extension

During operation the motor will warm up. This temperature rise makes the steel shaft to expand in axial direction. Below Table 12 indicates the extension at ambient temperature +20°C and bearings temperature +95°C.

Frame	Standard shaft length E (mm)	Maximum temperature change Difference ΔT (Ambient +20℃, Bearing Temp 95℃)	Expansion Coefficient of Shaft Steel	Extended shaft length at load ΔTmm (Maximum)
80	40	75	0.00001159	0.03477000
90	50	75	0.00001159	0.04346250
100	60	75	0.00001159	0.05215500
112	60	75	0.00001159	0.05215500
132	80	75	0.00001159	0.06954000
160	110	75	0.00001159	0.09561750
180	110	75	0.00001159	0.09561750
200L	110	75	0.00001159	0.09561750
225-2	110	75	0.00001159	0.09561750
225-4/6/8	140	75	0.00001159	0.12169500
250M	140	75	0.00001159	0.12169500
280	140	75	0.00001159	0.12169500
315-2	140	75	0.00001159	0.12169500
315-4/6/8	170	75	0.00001159	0.14777250
355-2	140	75	0.00001159	0.12169500
355-4/6/8	170	75	0.00001159	0.14777250

Table 12 - Shaft extension

6. Maintenance

WARNING

Voltage may be connected at standstill inside the terminal box for heating elements or direct winding heating.

Standards IEC/EN 60079-17 and -19 relating to repair and maintenance of electrical apparatus in explosive atmospheres must be taken into consideration. Only competent personnel acquainted with these standards should handle this type of apparatus.

Sticker on terminal box for information:

WARNING
DO NOT OPEN WHEN ENERGIZED
DO NOT OPEN WHEN AN EXPLOSIVE ATMOSPHERE IS PRESENT.

6.1. General inspection

The maintenance and repair procedures shall be established for the motors, which could be divided into monthly maintenance and annual maintenance (i.e. routine repair and overhaul).

6.1.1. Monthly maintenance

- Cleaning: Clean away the dust and dirt on the motor surface and measure the insulation resistance. Keep the motor clean and ensure free ventilation airflow. If the motor is used in a dusty environment, the ventilation system must be regularly checked and cleaned.
- Check the condition of shaft seals and replace, if necessary, with original parts.
- Check terminal connections: the connecting bolts, screws or nuts in terminal box to see whether they are loose or not, fasten and replace them if necessary.
- Check earthing connection: the earthing bolts, screws or nuts connections, check the fastening bolts on end shields, inner and outer bearing caps.
- Check the bearing condition by listening for any unusual noise, vibration measurement, bearing temperature, inspection of spent grease or SPM bearing monitoring. Pay special attention to bearings when their calculated rated lifetime is ending. Also check bearings and lubricating system to see whether the grease in bearings is dirty, dry or short. Clean away the old grease and replenish new one if necessary.
- Check the fan to see whether it is broken or damaged, check whether the fixing bolts are loose, damaged, worn or deformed. Replace the fixing bolts or the fan if necessary.
- Check mounting and assembly bolts.

When signs of wear are noticed, dismantle the motor, check the parts and replace if necessary. When bearings are changed, replacement bearings must be of the same type as those originally fitted. The shaft seals have to be replaced with seals of the same quality and characteristics as the originals when changing the bearings.

If motors are equipped with drain plug, periodically open the drain plug, by turning it counter clockwise, tap it to check free operation and close it by pressing and screwing it clockwise. This operation must be done when the motor is at standstill. The frequency of checks depends on the humidity level of the ambient air and on the local weather conditions.

6.1.2. Annual maintenance

Annual maintenance includes the monthly maintenance as well plus:

- Check the external of motor to see whether the external parts are damaged whether the components are present. Clean away dust and dirt on the surface and repair the damaged positions.
- Clear and check the internal of motor:
  - Check whether the stator windings are dirty or damaged. Clean away dust and dirty on the stator. If oil dirt is found, clean it with dry cloth first, then clean it by cloth with gasoline. Meanwhile check the winding insulation carefully to see whether the insulation is aged or damaged. If these traces are present, the stators should be repaired and varnished.
  - Check whether the rotor is dirty or damaged. Observe the rotor visually and compare the surface colour to see whether the rotor is broken, dirty or damaged.

    - Check stator and rotor cores to see whether they are deformed. They should be repaired if deformation is found.
- Measure insulation resistance on all the live parts with a megger and the insulation resistance should be larger than 5MΩ.
- Bearing cleaning and check:
    - Put the bearing into a container filled with gasoline and stir it for sometimes. Then hold the inner bearing ring and rotate the outer bearing ring. During rotation, put the bearing into another container with gasoline and hold it by hand for cleaning.
    - Check bearing surface, rolling elements and the bearing races to see whether the bearing has become purple or has been annealed by heating. Replace the bearing if necessary.
    - Measure the inner and outer bearing diameters and width if possible.
    - Hot fit is allowed to assemble the bearing onto the shaft. When heating the bearing, the bearing lubrication temperature should not exceed 100 ℃ and bearing should be heated evenly.

Trial operation should be done after overhaul. Measure insulation resistance and check whether all parts are in good conditions. Run the motor at no load for half an hour, and then run it at load.

6.2. Standby motors

If the motor is in standby for a longer period of time on a ship or in other vibrating environment the following measures have to be taken:

- The shaft must be rotated regularly every 2 weeks by means of starting of the system. In case a start up is not possible, for any reason, at least the shaft has to be turned by hand in order to achieve a different position once a week. Vibrations caused by other vessel equipment will cause bearing pitting which should be minimized by regular operation/hand turning.
- The bearing must be greased while rotating the shaft every year. If the motor has been provided with roller bearing at the driven end, the transport lock must be removed before rotating the shaft. The transport locking must be remounted in case of transportation.
- All vibrations must be avoided to prevent a bearing from failing.

6.3. Check bearings during operation

The maximum permissible bearing temperature should not exceed 95 °C (check by thermometer or mounted Pt-100 if the motor is equipped with that option.). The bearing must be inspected every 2500h operation.

6.4. Lubrication

In addition, it is necessary to change the lubricating grease in time if it turns bad. When changing the grease, always clean the old grease inside the bearing chamber, re-greasing pipe and clean the bearing with a solvent (Veidec Brake Cleaner or equivalent). After degreasing you must be sure that the used solvent has completely dried before you apply the new grease the new grease could be refilled directly to the bearing chamber. The quantity is half of bearing chamber volume for 2 pole motors and two-thirds of the bearing chamber volume for 4 pole and up motors. Grease could be refilled during operation. The recommended interval and amount are shown in Table 13 - Lubrications of bearings The recommended grease is Mobil UNIREX N2, BP LS3 SHELL ALVANIA R3. Different greases are not allowed to be mixed, as they are perhaps not compatible with each other.

Frame size	Amount of grease (g)	Speed (r/min)					
		3600	3000	1800	1500	1000	500-900
Ball bearings - Lubrication intervals in duty hours							
160	20	3200	4200	6000	7000	9000	10000
180	20	3200	4200	6000	7000	9000	10000
200	25	1800	3100	5500	6500	8500	9000
225	25	1800	3100	5500	6500	8500	9000
250	35	800	2000	5000	6000	8000	8500
280	35	800	2000	5000	6000	8000	8500
315	50	800	2000	4600	5500	7000	8000
355	60	-	1000	4000	5000	7000	8000
Roller bearings - Lubrication intervals in duty hours							
200	25	900	1500	4300	5000	6500	7000
225	25	900	1500	4300	5000	6500	7000
250	35	400	1000	3300	4500	6300	6800
280	35	400	1000	3300	4500	6300	6800
315	50	400	1000	2700	3800	6000	6500
355	60	-	-	2200	3200	5500	6000

Table 13 - Lubrications of bearings (regreasing)

REMARKS

1. In case of motors operating in temperature above 40°C it's necessary to shorten mentioned above time of operation between regreasing and grease exchange.
2. Periods of regreasing in case of motors operating in vertical position should be shortened by 50% of the above intervals.
3. Your motor can be special designed and have other bearings than standard bearings. Therefore, always check the motor nameplate for correct information regarding your actual motor.

6.5. Notes for disassembling

When disassembling the motor, all the machined surfaces should be coated with corrosion resistant grease and kept properly to avoid damage.

When the rotor is withdrawn or inserted, care must be taken to prevent the stator winding and insulation from being damaged.

When renewing windings, the winding data and insulating configuration should not be changed. Or the performances would worsen and result in failures.

Replace the sealing gaskets in the terminal if they are aged.

The V seal or the skeleton oil seal in the shaft opening shall be replaced in time if it is aged or worn out.

7. Use at specific conditions

7.1. Auxiliary devices

The motors can be equipped with auxiliary devices, heaters, thermal detectors such as thermocontact, ptc (thermistors) or Pt-100 etc.

7.1.1. Anti-condensation heaters

The anti-condensate heaters installed inside of stator winding have maximum power of 110W and are allowed to be in operation only when the motor is not powered.

The lead cables of heaters are brought to the main terminal box (frame 80-280) or auxiliary terminal box (frame 315-355) with marks Q1/Q2 in the box.

A warning label shall apply if space heater is equipped outside the terminal box:

CAUTION: HEATER ENERGIZED

7.2. Motors supplied via inverters

The motor intended for inverter duty is equipped inside of stator winding with one ptc or Pt-100 thermal detectors per phase for temperature control.

The user must connect the ptc or Pt-100 to a tripping relay (cut-out) capable of ensuring that the power supply is cut off whenever a dangerous temperature is reached. The reset of said cut-off must be performed manually only, not automatically.

In observance of the standards the user must:

- Use a cut-out in compliance with the principles of the IEC 61508 standards (Fail Safe type)
- Use a dual protection circuit

The cables of ptc are brought to the main terminal box (frame 80-280) or auxiliary terminal box (frame 315-355) with marks P1/P2 in the box.

Pt-100 are only available for the motors with auxiliary terminal box (frame 250-355). The lead cables of Pt-100 are brought to the auxiliary terminal box with marks P1/P2, P3/P4 and P5/P6).

The choice of type of frequency inverters must be considering that the motor must not be subjected to voltage peaks exceeding 2,8 times the nominal voltage of the motor. It is necessary to consider in this respect that the voltage peaks value is also influenced by the length of power supply cables.

When power is supplied by frequency converter, the installer bears responsibility for checks and any measures required to comply with immunity and emission limits as laid down by the standards.

A warning label shall apply on the motor if ptc or Pt-100 is equipped inside:

CAUTION: WINDING PROTECTED WITH PTC THERMISTORS

Or

CAUTION: WINDING PROTECTED WITH PT100 DETECTORS CALIBRATED AT 120°C

7.2.1. Power output at inverter duty

Motor intended to be operated from an inverter shall additionally be marked:

- “For inverter supply”
- Speed range or frequency range
- Minimum switching frequency
- Type of torque application e.g.:
  - Variable torque
  - Constant torque
  - Constant power
  - Torque limits

Power see pages 24 - 27.

7.3. Forced cooling IC416

The cooling is IC411 as standard.

Forced ventilation, IC416, can be achieved by means of certified auxiliary motor. When use of cooling IC416 motors are not allowed to be started if the extra cooling (IC416) is not running correct.

7.4. Power for motors supplied via inverters

Data for ambient temperature +40°C, supply 400V 50Hz and altitude 1000 m above sea level. Factors to calculate other data see page 28.

To avoid overheating of the motors during inverter duty the output must decrease. One of the main reasons for this is that the air flow from motors cooling fan transport less air over the motor. See these diagram and tables on page 24 - 27.

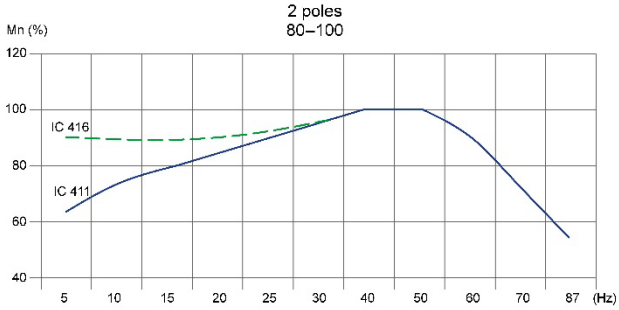

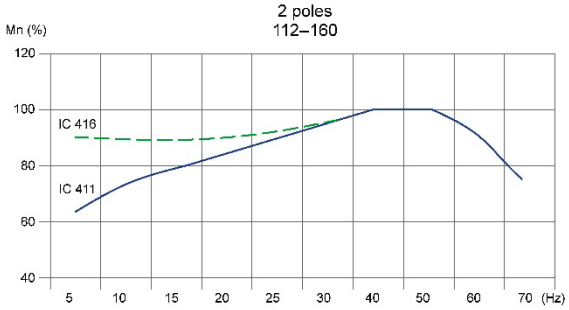

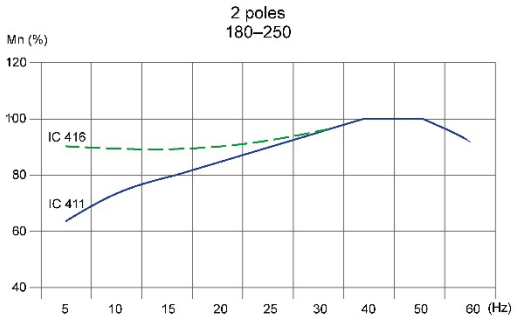

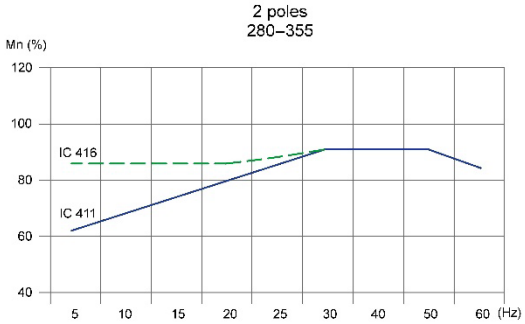

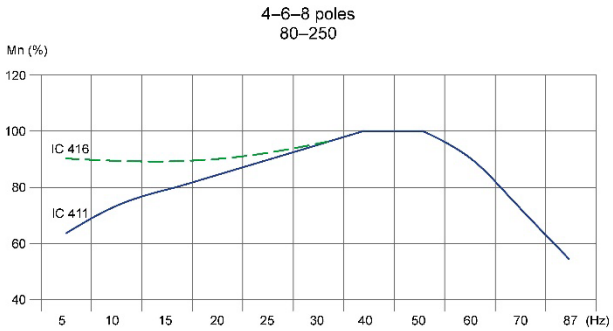

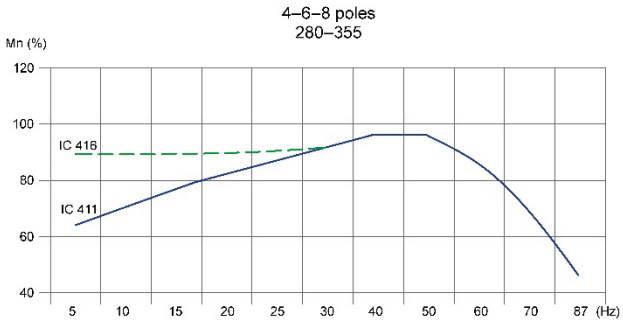

7.4.1. 2-pole motors

Motor type	Power S1 main connection 400V 50Hz	Cooling IC411														
		Constant torque range 5-50Hz				Constant torque range 10-50Hz				Constant torque range 25-50Hz				Quadratic torque 5-50Hz		
	kW	kW	kW	Nm	A	kW	kW	Nm	A	kW	kW	Nm	A	kW	Nm	A
		5Hz	50Hz	Torque	Current	10Hz	50Hz	Torque	Current	25Hz	50Hz	Torque	Current	50Hz	Torque	Current
3DX 80M1-2	0,75	0,05	0,48	1,6	1,0	0,11	0,56	1,9	1,2	0,35	0,69	2,3	1,5	0,75	2,5	1,6
3DX 80M2-2	1,1	0,07	0,70	2,3	1,5	0,16	0,81	2,7	1,7	0,51	1,01	3,3	2,1	1,1	3,6	2,3
3DX 90S-2	1,5	0,10	0,96	3,2	1,9	0,22	1,11	3,7	2,2	0,69	1,38	4,6	2,8	1,5	5,0	3,0
3DX 90L-2	2,2	0,14	1,41	4,7	2,8	0,33	1,63	5,4	3,3	1,01	2,02	6,7	4,0	2,2	7,3	4,4
3DX 100L-2	3	0,19	1,92	6,3	3,6	0,44	2,22	7,3	4,2	1,38	2,76	9,1	5,2	3	9,9	5,7
3DX 112M-2	4	0,26	2,56	8,4	4,7	0,59	2,96	9,8	5,5	1,84	3,68	12,1	6,8	4	13,2	7,4
3DX 132S1-2	5,5	0,35	3,52	11,5	6,5	0,81	4,07	13,3	7,5	2,53	5,06	16,6	9,3	5,5	18,0	10,1
3DX 132S2-2	7,5	0,48	4,80	15,7	8,6	1,11	5,55	18,2	10,0	3,45	6,90	22,6	12,4	7,5	24,6	13,5
3DX 160M1-2	11	0,70	7,04	22,8	12,5	1,63	8,14	26,4	14,5	5,06	10,12	32,8	18,0	11	35,7	19,6
3DX 160M2-2	15	0,96	9,60	31,1	17,0	2,22	11,10	36,0	19,6	6,90	13,80	44,7	24,4	15	48,6	26,5
3DX 160L-2	18,5	1,18	11,8	38,5	20,8	2,74	13,7	44,5	24,1	8,51	17,0	55,3	29,9	18,5	60,1	32,5
3DX 180M-2	22	1,41	14,1	45,4	24,6	3,26	16,3	52,5	28,5	10,12	20,2	65,3	35,4	22	71,0	38,5
3DX 200L1-2	30	1,92	19,2	61,8	33,4	4,44	22,2	71,5	38,6	13,80	27,6	88,9	48,0	30	96,6	52,2
3DX 200L2-2	37	2,37	23,7	76,3	41,0	5,48	27,4	88,2	47,4	17,02	34,0	109,7	58,9	37	119	64,0
3DX 225M-2	45	2,88	28,8	92,7	49,7	6,66	33,3	107	57,4	20,70	41,4	133	71,4	45	145	77,6
3DX 250M-2	55	3,52	35,2	113	60,5	8,14	40,7	131	70,0	25,30	50,6	163	87,0	55	177	94,6
3DX 280S-2	75	4,80	48,0	154	82,2	11,10	55,5	178	95,0	34,50	69,0	221	118	75	240	128
3DX 280M-2	90	5,76	57,6	185	98,3	13,32	66,6	214	114	41,40	82,8	266	141	90	289	154
3DX 315S-2	110	7,04	70,4	226	120	16,28	81,4	261	139	50,60	101	324	172	110	353	187
3DX 315M-2	132	8,45	84,5	271	144	19,54	97,7	313	166	60,72	121	389	206	132	423	224
3DX 315L1-2	160	10,2	102	328	174	23,7	118	379	201	73,6	147	472	250	160	513	271
3DX 315L2-2	200	12,8	128	410	217	29,6	148	474	251	92,0	184	590	312	200	641	339
3DX 355S1-2	185	11,8	118	379	201	27,4	137	439	232	85,1	170	545	288	185	593	314
3DX 355S2-2	200	12,8	128	410	217	29,6	148	474	251	92,0	184	590	312	200	641	339
3DX 355M1-2	220	14,1	141	451	238	32,6	163	522	276	101	202	649	343	220	705	372
3DX 355M2-2	250	16,0	160	513	271	37,0	185	593	313	115	230	737	389	250	801	423
3DX 355L1-2	280	17,9	179	574	303	41,4	207	664	351	129	258	826	436	280	897	474
3DX 355L2-2	315	20,2	202	646	341	46,6	233	747	395	145	290	929	491	315	1010	533

Motor type	Power S1 main connection 400V 50Hz	Cooling IC416			Cooling IC411 / IC416				
		Constant torque range 5-50 Hz			Constant torque range 50-60 Hz Weakened flux (max speed 3600rpm)				
	kW	kW	Nm	A	kW	kW	Nm	Nm	A
		50Hz	Torque	Current	50Hz	60Hz	50Hz	60Hz	50Hz
3DX 80M1-2	0,75	0,75	2,4	1,6	0,75	0,6	2,4	1,6	1,6
3DX 80M2-2	1,1	1,1	3,5	2,3	1,1	0,9	3,5	2,3	2,3
3DX 90S-2	1,5	1,5	4,8	3,0	1,5	1,2	4,8	3,2	3,0
3DX 90L-2	2,2	2,2	7,0	4,4	2,2	1,8	7,0	4,7	4,4
3DX 100L-2	3	3	9,5	5,7	3,0	2,4	9,5	6,3	5,7
3DX 112M-2	4	4	12,7	7,4	4,0	3,2	12,7	8,5	7,4
3DX 132S1-2	5,5	5,5	17,5	10,1	5,5	4,4	17,5	11,7	10,1
3DX 132S2-2	7,5	7,5	23,9	13,5	7,5	6,0	23,9	15,9	13,5
3DX 160M1-2	11	11	35,0	19,6	11	8,8	35,0	23,3	19,6
3DX 160M2-2	15	15	47,7	26,5	15	12,0	47,7	31,8	26,5
3DX 160L-2	18,5	18,5	58,9	32,5	18,5	14,8	58,9	39,3	32,5
3DX 180M-2	22	22	70,0	38,5	22	17,6	70,0	46,7	38,5
3DX 200L1-2	30	30	95,5	52,2	30	24,0	95,5	63,7	52,2
3DX 200L2-2	37	37	118	64,0	37	29,6	118	78,5	64,0
3DX 225M-2	45	45	143	77,6	45	36,0	143	95,5	77,6
3DX 250M-2	55	55	175	94,6	55	44,0	175	117	94,6
3DX 280S-2	75	75	239	128	75	60,0	239	159	128
3DX 280M-2	90	90	287	154	90	72,0	287	191	154
3DX 315S-2	110	110	350	187	110	88,0	350	233	187
3DX 315M-2	132	132	420	224	132	106	420	280	224
3DX 315L1-2	160	160	509	271	160	128	509	340	271
3DX 315L2-2	200	200	637	339	200	160	637	424	339
3DX 355S1-2	185	185	589	314	185	148	589	393	314
3DX 355S2-2	200	200	637	339	200	160	637	424	339
3DX 355M1-2	220	220	700	372	220	176	700	467	372
3DX 355M2-2	250	250	796	423	250	200	796	531	423
3DX 355L1-2	280	280	891	474	280	224	891	594	474
3DX 355L2-2	315	315	1003	533	315	252	1003	668	533

7.4.2. 4-pole motors

Motor type	Power S1 main connection	Cooling IC411														
		Constant torque range 5-50Hz				Constant torque range 10-50Hz				Constant torque range 25-50Hz				Quadratic torque 5-50Hz		
	kW	kW	kW	Nm	A	kW	kW	Nm	A	kW	kW	Nm	A	kW	Nm	A
		5Hz	50Hz	Torque	Current	10Hz	50Hz	Torque	Current	25Hz	50Hz	Torque	Current	50Hz	Torque	Current
3DX 80M1-4	0,55	0,04	0,35	2,4	0,8	0,08	0,41	2,7	1,0	0,25	0,51	3,4	1,2	0,55	3,7	1,3
3DX 80M2-4	0,75	0,05	0,48	3,2	1,2	0,11	0,56	3,7	1,3	0,35	0,69	4,6	1,7	0,75	5,0	1,8
3DX 90S-4	1,1	0,07	0,70	4,7	1,7	0,16	0,81	5,4	1,9	0,51	1,01	6,7	2,4	1,1	7,3	2,6
3DX 90L-4	1,5	0,10	0,96	6,3	2,2	0,22	1,11	7,3	2,5	0,69	1,38	9,1	3,1	1,5	9,9	3,4
3DX 100L1-4	2,2	0,14	1,41	9,2	2,9	0,33	1,63	10,7	3,4	1,01	2,02	13,2	4,2	2,2	14,4	4,6
3DX 100L2-4	3	0,19	1,92	12,6	3,9	0,44	2,22	14,6	4,5	1,38	2,76	18,1	5,6	3	19,7	6,1
3DX 112M-4	4	0,26	2,56	16,8	5,2	0,59	2,96	19,5	6,0	1,84	3,68	24,2	7,5	4	26,3	8,1
3DX 132S-4	5,5	0,35	3,52	23,0	6,9	0,81	4,07	26,6	8,0	2,53	5,06	33,1	9,9	5,5	36,0	10,8
3DX 132M-4	7,5	0,48	4,80	31,4	9,2	1,11	5,55	36,3	10,7	3,45	6,90	45,2	13,2	7,5	49,1	14,4
3DX 160M-4	11	0,70	7,04	45,8	13,1	1,63	8,14	52,9	15,1	5,06	10,12	65,8	18,8	11	71,5	20,4
3DX 160L-4	15	0,96	9,6	62,3	17,7	2,22	11,1	72,1	20,4	6,90	13,8	89,6	25,4	15	97,4	27,6
3DX 180M-4	18,5	1,18	11,8	76,7	21,4	2,74	13,7	88,7	24,8	8,51	17,0	110,2	30,8	18,5	119,8	33,5
3DX 180L-4	22	1,41	14,1	91,1	25,4	3,26	16,3	105	29,4	10,12	20,2	131,0	36,5	22	142,4	39,7
3DX 200L-4	30	1,92	19,2	124	34,4	4,44	22,2	143	39,8	13,80	27,6	178,1	49,5	30	194	53,8
3DX 225S-4	37	2,37	23,7	152	42,3	5,48	27,4	176	48,9	17,02	34,0	219	60,8	37	238	66,1
3DX 225M-4	45	2,88	28,8	185	51,3	6,66	33,3	214	59,3	20,70	41,4	266	73,8	45	289	80,2
3DX 250M-4	55	3,52	35,2	227	62,5	8,14	40,7	263	72,2	25,30	50,6	327	89,8	55	355	98
3DX 280S-4	75	4,80	48,0	308	82,9	11,10	55,5	356	95,8	34,50	69,0	442	119	75	481	130
3DX 280M-4	90	5,76	57,6	369	99,2	13,32	66,6	427	115	41,40	82,8	531	143	90	577	155
3DX 315S-4	110	7,04	70,4	451	121	16,28	81,4	522	140	50,60	101	649	174	110	705	189
3DX 315M-4	132	8,4	84,5	541	145	19,5	97,7	626	168	60,7	121	778	208	132	846	227
3DX 315L1-4	160	10,2	102	656	173	23,7	118	759	200	73,6	147	943	249	160	1026	271
3DX 315L2-4	200	12,8	128	820	216	29,6	148	949	250	92,0	184	1179	311	200	1282	338
3DX 355S1-4	185	11,8	118	759	200	27,4	137	877	231	85,1	170	1091	288	185	1186	313
3DX 355S2-4	200	12,8	128	820	216	29,6	148	949	250	92,0	184	1179	311	200	1282	338
3DX 355M1-4	220	14,1	141	902	238	32,6	163	1043	275	101	202	1297	342	220	1410	372
3DX 355M2-4	250	16,0	160	1025	267	37,0	185	1186	309	115	230	1474	384	250	1602	418
3DX 355L1-4	280	17,9	179	1149	299	41,4	207	1328	346	129	258	1651	430	280	1795	468
3DX 355L2-4	315	20,2	202	1292	337	46,6	233	1494	389	145	290	1857	484	315	2019	526

Motor type	Power S1 main connection	Cooling IC416			Cooling IC411 / IC416								
		Constant torque range 5-50 Hz			Constant torque range 50-87 Hz Weakened flux					Constant torque range 50-87 Hz Constant flux			
	kW	kW	Nm	A	kW	kW	Nm	Nm	A	kW	kW	Nm	A
		50Hz	Torque	Current	50Hz	87Hz	50Hz	87Hz	50Hz	50Hz	87Hz	Torque	Current
3DX 80M1-4	0,55	0,55	3,5	1,3	0,6	0,3	3,5	1,0	1,3	0,55	1,0	3,7	2,3
3DX 80M2-4	0,75	0,75	4,8	1,8	0,8	0,4	4,8	1,4	1,8	0,75	1,3	5	3,1
3DX 90S-4	1,1	1,1	7,0	2,6	1,1	0,6	7,0	2,0	2,6	1,1	1,9	7,3	4,5
3DX 90L-4	1,5	1,5	9,5	3,4	1,5	0,8	9,5	2,7	3,4	1,5	2,6	9,9	5,9
3DX 100L1-4	2,2	2,2	14,0	4,6	2,2	1,1	14,0	4,0	4,6	2,2	3,8	14,4	8,0
3DX 100L2-4	3	3	19,1	6,1	3,0	1,5	19,1	5,5	6,1	3	5,2	19,7	10,6
3DX 112M-4	4	4	25,5	8,1	4,0	2,0	25,5	7,4	8,1	4	7,0	26,3	14,1
3DX 132S-4	5,5	5,5	35,0	10,8	5,5	2,8	35,0	10,1	10,8	5,5	9,6	36	18,8
3DX 132M-4	7,5	7,5	47,7	14,4	8	3,8	47,7	13,8	14,4	7,5	13,0	49,1	25,0
3DX 160M-4	11	11	70,0	20,4	11	5,5	70,0	20,2	20,4	11	19,1	71,5	35,5
3DX 160L-4	15	15	95,5	27,6	15,0	7,5	95,5	27,6	27,6	15	26,1	97,4	48,0
3DX 180M-4	18,5	18,5	118	33,5	19	9,3	117,8	34,0	33,5	18,5	32,2	120	58,3
3DX 180L-4	22	22	140	39,7	22	11,0	140,1	40,5	39,7	22	38,3	142	69,0
3DX 200L-4	30	30	191	53,8	30	15,0	191	55,2	53,8	30	52,2	194	94
3DX 225S-4	37	37	236	66,1	37	18,5	236	68,1	66,1	37	64,3	238	115
3DX 225M-4	45	45	287	80,2	45	22,5	287	82,8	80,2	45	78,3	289	139
3DX 250M-4	55	55	350	97,6	55	27,5	350	101	97,6	55	96	355	170
3DX 280S-4	75	75	478	130	75	37,5	478	138	130	75	130	481	225
3DX 280M-4	90	90	573	155	90	45,0	573	166	155	90	157	577	270
3DX 315S-4	110	110	700	189	110	55,0	700	202	189	110	191	705	329
3DX 315M-4	132	132	840	227	132	66,0	840	243	227	132	230	846	394
3DX 315L1-4	160	160	1019	271	160	80	1019	294	271	160	278	1026	471
3DX 315L2-4	200	200	1273	338	200	100,0	1273	368	338	200	348	1282	588
3DX 355S1-4	185	185	1178	313	185	93	1178	340	313	185	322	1186	544
3DX 355S2-4	200	200	1273	338	200	100	1273	368	338	200	348	1282	588
3DX 355M1-4	220	220	1401	372	220	110	1401	405	372	220	383	1410	646
3DX 355M2-4	250	250	1592	418	250	125	1592	460	418	250	435	1602	726
3DX 355L1-4	280	280	1783	468	280	140	1783	515	468	280	487	1795	814
3DX 355L2-4	315	315	2005	526	315	158	2005	580	526	315	548	2019	915

7.4.3. 6-pole motors

Motor type	Power S1 main connection	Cooling IC411														
		Constant torque range 5-50Hz				Constant torque range 10-50Hz				Constant torque range 25-50Hz				Quadratic torque 5-50Hz		
	kW	kW	kW	Nm	A	kW	kW	Nm	A	kW	kW	Nm	A	kW	Nm	A
		5Hz	50Hz	Torque	Current	10Hz	50Hz	Torque	Current	25Hz	50Hz	Torque	Current	50Hz	Torque	Current
3DX 80M1-6	0,37	0,02	0,24	2,6	0,8	0,05	0,27	3,0	0,9	0,17	0,34	3,7	1,1	0,37	4,0	1,2
3DX 80M2-6	0,55	0,04	0,35	3,8	1,0	0,08	0,41	4,4	1,1	0,25	0,51	5,4	1,4	0,55	5,9	1,5
3DX 90S-6	0,75	0,05	0,48	4,8	1,2	0,11	0,56	5,6	1,4	0,35	0,69	6,9	1,7	0,75	7,5	1,9
3DX 90L-6	1,1	0,07	0,70	7,1	1,8	0,16	0,81	8,2	2,1	0,51	1,01	10,2	2,6	1,1	11,1	2,8
3DX 100L-6	1,5	0,10	0,96	9,6	2,3	0,22	1,11	11,1	2,7	0,69	1,38	13,8	3,3	1,5	15,0	3,6
3DX 112M-6	2,2	0,14	1,41	14,1	3,3	0,33	1,63	16,3	3,8	1,01	2,02	20,2	4,7	2,2	22,0	5,1
3DX 132S-6	3	0,19	1,92	18,8	4,4	0,44	2,22	21,8	5,0	1,38	2,76	27,0	6,3	3	29,4	6,8
3DX 132M1-6	4	0,26	2,56	25,1	5,8	0,59	2,96	29,0	6,7	1,84	3,68	36,1	8,3	4	39,2	9,0
3DX 132M2-6	5,5	0,35	3,52	34,5	7,7	0,81	4,07	39,9	9,0	2,53	5,06	49,6	11,1	5,5	53,9	12,1
3DX 160M-6	7,5	0,48	4,80	46,8	10,0	1,11	5,55	54,1	11,5	3,45	6,90	67,3	14,4	7,5	73,1	15,6
3DX 160L-6	11	0,70	7,04	68,6	14,4	1,63	8,14	79,3	16,7	5,06	10,1	98,6	20,7	11	107	22,5
3DX 180L-6	15	0,96	9,60	93,6	18,8	2,22	11,1	108	21,8	6,90	13,8	135	27,0	15	146	29,4
3DX 200L1-6	18,5	1,18	11,8	115	23,0	2,74	13,7	133	26,6	8,51	17,0	166	33,0	18,5	180	35,9
3DX 200L2-6	22	1,41	14,1	137	26,9	3,26	16,3	159	31,1	10,1	20,2	197	38,6	22	214	42,0
3DX 225M-6	30	1,92	19,2	187	36,9	4,44	22,2	216	42,6	13,8	27,6	269	53,0	30	292	57,6
3DX 250M-6	37	2,37	23,7	228	43,6	5,48	27,4	264	50,4	17,0	34,0	328	62,7	37	357	68,1
3DX 280S-6	45	2,88	28,8	278	51,6	6,66	33,3	321	59,6	20,7	41,4	399	74,2	45	434	80,6
3DX 280M-6	55	3,52	35,2	340	62,8	8,14	40,7	393	72,6	25,3	50,6	488	90,3	55	531	98,1
3DX 315S-6	75	4,80	48,0	461	86,1	11,1	55,5	533	99,6	34,5	69,0	662	124	75	720	135
3DX 315M-6	90	5,76	57,6	553	104	13,3	66,6	639	121	41,4	82,8	795	150	90	864	163
3DX 315L1-6	110	7,04	70,4	676	126	16,3	81,4	781	145	50,6	101	971	181	110	1 056	197
3DX 315L2-6	132	8,45	84,5	811	149	19,5	97,7	938	172	60,7	121	1166	214	132	1 267	232
3DX 355S-6	160	10,2	102	983	178	23,7	118	1136	205	73,6	147	1413	255	160	1 536	278
3DX 355M1-6	185	11,8	118	1136	205	27,4	137	1314	237	85,1	170	1634	294	185	1 776	320
3DX 355M2-6	200	12,8	128	1229	222	29,6	148	1421	256	92,0	184	1766	319	200	1 920	346
3DX 355L1-6	220	14,1	141	1351	246	32,6	163	1563	284	101	202	1943	353	220	2 112	384
3DX 355L2-6	250	16,0	160	1536	279	37,0	185	1776	323	115	230	2208	402	250	2 400	437

Motor type	Power S1 main connection	Cooling IC416			Cooling IC411 / IC416								
		Constant torque range 5-50 Hz			Constant torque range 50-87 Hz Weakened flux					Constant torque range 50-87 Hz Constant flux			
	kW	kW	Nm	A	kW	kW	Nm	Nm	A	kW	kW	Nm	A
		50Hz	Torque	Current	50Hz	87Hz	50Hz	87Hz	50Hz	50Hz	87Hz	Torque	Current
3DX 80M1-6	0,37	0,37	3,5	1,2	0,37	0,185	3,5	1,0	1,2	0,37	0,6	4	2,1
3DX 80M2-6	0,55	0,55	5,3	1,5	0,55	0,275	5,3	1,5	1,5	0,55	1,0	5,9	2,6
3DX 90S-6	0,75	0,75	7,2	1,9	0,75	0,375	7,2	2,1	1,9	0,75	1,3	7,5	3,3
3DX 90L-6	1,1	1,1	10,5	2,8	1,1	0,55	10,5	3,0	2,8	1,1	1,9	11,1	4,9
3DX 100L-6	1,5	1,5	14,3	3,6	1,5	0,75	14,3	4,1	3,6	1,5	2,6	15	6,3
3DX 112M-6	2,2	2,2	21,0	5,1	2,2	1,1	21	6,1	5,1	2,2	3,8	22	8,9
3DX 132S-6	3	3	28,6	6,8	3	1,5	28,6	8,3	6,8	3	5,2	29,4	11,8
3DX 132M1-6	4	4	38,2	9	4	2	38,2	11,0	9,0	4	7,0	39,2	15,7
3DX 132M2-6	5,5	5,5	52,5	12,1	5,5	2,75	52,5	15,2	12,1	5,5	9,6	53,9	21,0
3DX 160M-6	7,5	7,5	71,6	15,6	7,5	3,75	71,6	20,7	15,6	7,5	13,0	73,1	27,1
3DX 160L-6	11	11	105	22,5	11	5,5	105	30,3	22,5	11	19,1	107	39,1
3DX 180L-6	15	15	143	29,4	15	7,5	143	41,4	29,4	15	26,1	146	51,1
3DX 200L1-6	18,5	18,5	177	35,9	18,5	9,25	177	51,1	35,9	18,5	32,2	180	62,4
3DX 200L2-6	22	22	210	42	22	11	210	60,7	42,0	22	38,3	214	73,0
3DX 225M-6	30	30	287	57,6	30	15	287	82,8	57,6	30	52,2	292	100
3DX 250M-6	37	37	353	68,1	37	18,5	353	102	68,1	37	64,3	357	118
3DX 280S-6	45	45	430	80,6	45	22,5	430	124	80,6	45	78,3	434	140
3DX 280M-6	55	55	525	98,1	55	27,5	525	152	98,1	55	95,7	531	171
3DX 315S-6	75	75	716	135	75	37,5	716	207	135	75	130	720	234
3DX 315M-6	90	90	859	163	90	45	859	248	163	90	157	864	283
3DX 315L1-6	110	110	1050	197	110	55	1050	304	197	110	191	1056	342
3DX 315L2-6	132	132	1261	232	132	66	1261	364	232	132	230	1267	404
3DX 355S-6	160	160	1528	278	160	80	1528	442	278	160	278	1536	483
3DX 355M1-6	185	185	1767	320	185	92,5	1767	511	320	185	322	1776	557
3DX 355M2-6	200	200	1910	346	200	100	1910	552	346	200	348	1920	602
3DX 355L1-6	220	220	2101	384	220	110	2101	607	384	220	383	2112	668
3DX 355L2-6	250	250	2388	437	250	125	2388	690	437	250	435	2400	759

7.4.4. 8-pole motors

Motor type	Power S1 main connection	Cooling IC411														
		Constant torque range 5-50Hz				Constant torque range 10-50Hz				Constant torque range 25-50Hz				Quadratic torque 5-50Hz		
	kW	kW	kW	Nm	A	kW	kW	Nm	A	kW	kW	Nm	A	kW	Nm	A
		5Hz	50Hz	Torque	Current	10Hz	50Hz	Torque	Current	25Hz	50Hz	Torque	Current	50Hz	Torque	Current
3DX 100L2-8	1,1	0,07	0,70	9,7	2,0	0,16	0,81	11,2	2,4	0,51	1,01	14,0	2,9	1,1	15,2	3,2
3DX 112M-8	1,5	0,10	0,96	13,3	2,8	0,22	1,11	15,4	3,2	0,69	1,38	19,1	4,0	1,5	20,8	4,3
3DX 132S-8	2,2	0,14	1,41	18,9	3,6	0,33	1,63	21,9	4,2	1,01	2,02	27,2	5,2	2,2	29,6	5,7
3DX 132M-8	3	0,19	1,92	25,9	4,8	0,44	2,22	29,9	5,6	1,38	2,76	37,2	6,9	3	40,4	7,5
3DX 160M1-8	4	0,26	2,56	34,0	6,3	0,59	2,96	39,3	7,3	1,84	3,68	48,9	9,1	4	53,1	9,9
3DX 160M2-8	5,5	0,35	3,52	46,7	8,4	0,81	4,07	54,0	9,7	2,53	5,06	67,2	12,1	5,5	73,0	13,1
3DX 160L-8	7,5	0,48	4,80	63,7	11,0	1,11	5,55	73,6	12,7	3,45	6,90	91,5	15,8	7,5	99,5	17,2
3DX 180L-8	11	0,70	7,04	93,4	15,7	1,63	8,14	108	18,1	5,06	10,1	134,2	22,5	11	146	24,5
3DX 200L-8	15	0,96	9,60	126	21,0	2,22	11,1	145	24,3	6,90	13,8	181	30,2	15	196	32,8
3DX 225S-8	18,5	1,18	11,8	153	25,2	2,74	13,7	177	29,2	8,51	17,0	220	36,2	18,5	239	39,4
3DX 225M-8	22	1,41	14,1	182	28,8	3,26	16,3	210	33,3	10,1	20,2	261	41,4	22	284	45,0
3DX 250M-8	30	1,92	19,2	248	38,5	4,44	22,2	287	44,5	13,8	27,6	356	55,4	30	387	60,2
3DX 280S-8	37	2,37	23,7	306	47,3	5,48	27,4	353	54,7	17,0	34,0	439	68,0	37	478	73,9
3DX 280M-8	45	2,88	28,8	372	57,0	6,66	33,3	430	65,9	20,7	41,4	534	81,9	45	581	89,0
3DX 315S-8	55	3,52	35,2	454	67,6	8,14	40,7	525	78,1	25,3	50,6	653	97,2	55	710	106
3DX 315M-8	75	4,80	48,0	619	91,5	11,1	55,5	716	106	34,5	69,0	890	132	75	968	143
3DX 315L1-8	90	5,76	57,6	743	109	13,3	66,6	860	126	41,4	82,8	1069	156	90	1162	170
3DX 315L2-8	110	7,04	70,4	909	132	16,3	81,4	1051	153	50,6	101	1306	190	110	1420	207
3DX 355S-8	132	8,45	84,5	1090	158	19,5	97,7	1261	183	60,7	121	1567	228	132	1704	248
3DX 355M-8	160	10,2	102	1322	192	23,7	118	1528	221	73,6	147	1900	275	160	2065	299
3DX 355L1-8	185	11,8	118	1528	222	27,4	137	1767	256	85,1	170	2197	318	185	2388	346
3DX 355L2-8	200	12,8	128	1652	236	29,6	148	1910	273	92,0	184	2375	339	200	2581	369

Motor type	Power S1 main connection	Cooling IC416			Cooling IC411 / IC416								
		Constant torque range 5-50 Hz			Constant torque range 50-87 Hz Weakened flux					Constant torque range 50-87 Hz Constant flux			
	kW	kW	Nm	A	kW	kW	Nm	Nm	A	kW	kW	Nm	A
		50Hz	Torque	Current	50Hz	87Hz	50Hz	87Hz	50Hz	50Hz	87Hz	Torque	Current
3DX 100L2-8	1,1	1,1	14,0	3,2	1,1	0,55	14	4,0	3,2	1,1	1,9	15,2	5,6
3DX 112M-8	1,5	1,5	19,1	4,3	1,5	0,75	19,1	5,5	4,3	1,5	2,6	20,8	7,5
3DX 132S-8	2,2	2,2	28,0	5,7	2,2	1,1	28	8,1	5,7	2,2	3,8	29,6	9,9
3DX 132M-8	3	3	38,2	7,5	3	1,5	38,2	11,0	7,5	3	5,2	40,4	13,0
3DX 160M1-8	4	4	50,9	9,9	4	2	50,9	14,7	9,9	4	7,0	53,1	17,2
3DX 160M2-8	5,5	5,5	70,0	13,1	5,5	2,75	70	20,2	13,1	5,5	9,6	73	22,8
3DX 160L-8	7,5	7,5	95,5	17,2	7,5	3,75	95,5	27,6	17,2	7,5	13,0	99,5	29,9
3DX 180L-8	11	11	140	24,5	11	5,5	140	40,5	24,5	11	19,1	146	42,6
3DX 200L-8	15	15	191	32,8	15	7,5	191	55,2	32,8	15	26,1	196	57,0
3DX 225S-8	18,5	18,5	236	39,4	18,5	9,25	236	68,1	39,4	18,5	32,2	239	68,5
3DX 225M-8	22	22	280	45	22	11	280	81,0	45,0	22	38,3	284	78,3
3DX 250M-8	30	30	382	60,2	30	15	382	110	60,2	30	52,2	387	105
3DX 280S-8	37	37	471	73,9	37	18,5	471	136	73,9	37	64,3	478	129
3DX 280M-8	45	45	573	89	45	22,5	573	166	89,0	45	78,3	581	155
3DX 315S-8	55	55	700	106	55	27,5	700	202	106	55	95,7	710	184
3DX 315M-8	75	75	955	143	75	37,5	955	276	143	75	130	968	249
3DX 315L1-8	90	90	1146	170	90	45	1146	331	170	90	157	1162	295
3DX 315L2-8	110	110	1401	207	110	55	1401	405	207	110	191	1420	360
3DX 355S-8	132	132	1681	248	132	66	1681	486	248	132	230	1704	430
3DX 355M-8	160	160	2037	299	160	80	2037	589	299	160	278	2065	521
3DX 355L1-8	185	185	2356	346	185	92,5	2356	681	346	185	322	2388	602
3DX 355L2-8	200	200	2547	369	200	100	2547	736	369	200	348	2581	641

7.5. Warning about high ambient temperature

The motor intended to use with ambient temperature > 50 ℃ shall be labelled as:

The motor intended for use with ambient temperature > 50 °C shall be fed with cable of thermal stability not less of 95 °C

7.6. Output from motor during special ambient situations

The output of motor is based on the operation conditions; ambient -20 ℃ - + 40 ℃, altitude up to 1000m and S1 duty. If the motor operates at different conditions, the following derating or rating factors shall apply:

7.6.1. Ambient temperature

Maximum ambient temperature is +60 °C, with a derating of output above +40 °C as in table:

Ambient temperature	42,5 °C	45 °C	47,5 °C	50 °C
Output factor	0,98	0,96	0,94	0,93
Ambient temperature	52,5 °C	55 °C	57,5 °C	60 °C
Output factor	0,91	0,90	0,88	0,86

7.6.2. Altitude

Maximum altitude above sea level is 4000 m, with a derating of output above +1000 m as in table:

Altitude	1500 m	2000 m	2500 m	3000 m	3500 m	4000 m
Output factor	0,96	0,92	0,88	0,84	0,80	0,76

7.6.3. Different supply

Motor winded for 50 Hz can also be supplied with 60 Hz and increase the output accordingly. Below table is based on winding 400 V 50 Hz and the alternative voltage is for 60 Hz:

Voltage at 60 Hz	380 V	400 V	415 V	440 V	460 V	480 V
Output factor	1	1	1,05	1,15	1,15	1,20

7.6.4. Intermittent duty

The rated output is based on S1-duty. If the duty cycle is intermittent an increase of output is possible.

NOTE When intermittent duty a ptc or Pt-100 thermal detectors per phase for temperature control. More information see under 7.2.

S2-duty

Duty	S2-10min	S2-30min	S2-60min	S2-90min
Output factor	1,50	1,20	1,10	1,05

S3-duty

Duty	S3-15%	S3-25%	S3-40%	S3-60%
Output factor	1,50	1,40	1,20	1,10

S6-duty

Duty	S6-15%	S6-25%	S6-40%	S6-60%
Output factor	1,60	1,50	1,40	1,20

7.7. Motor with cables permanently connected

The motor when provided with cables permanently connected shall have these cables protected against the risk of damage due to mechanical stresses. The end connection shall be made according to one of the types of protection indicated in the IEC/EN 60079-0 standard and in accordance with the installation rules in force in the site of installation.

When the flying leads are adopted, the ATEX and IEC Ex certified cable glands shall be adopted.

7.8. Paint for Group IIC motor intended for marine application

For the Group IIC motor intended for marine application, the paint thickness may exceed 0.2mm. A WARNING label shall apply

WARNING-POTENTIAL ELECTROSTATIC CHARGING HAZARD- clean the motor with a wet or by non-fractional means.

8. Special conditions – “X”

The certificate number contains the letter “X” for the following reasons:

a) Field repairs of flameproof joints should not be undertaken by the end user. In the event that flameproof joint must be repaired, contact the manufacturer. Repairs of flameproof joints must be made in compliance with the structural specifications in manufacturer´s drawings. Repairs must NOT be made on the basis of values specified in table 2 and 3 of the IEC/EN 60079-1.
b) The anti-condensate heaters installed inside of the motor of stator winding have maximum power of 110 W and are allowed to be in operation only when the motors are not powered.
c) Motors supplied by inverters are equipped inside of stator winding with ptc thermal detectors per phase for temperature control. These are to be connected to a protection circuit so as to limit the stator temperature to maximum 120 °C for temperature class T4. It is mandatory to connect and use these thermal detectors, along with a safety device. See also 7.2 Motors supplied via inverters.
d) Stray currents may be introduced into shaft and bearings in motors connected to inverters. One or more of the following solutions should be employed:
    a. Use of suitable filters (dU/dt-filters) between the motor and the inverter.
    b. Use of shaft earthing, conducting ring or bonding brushes with a Type of Protection suitable for the intended EPL (3DX-motors have EPL Gb). Example of mounting of conductive ring inside the motor on NDE-side (option to be ordered)

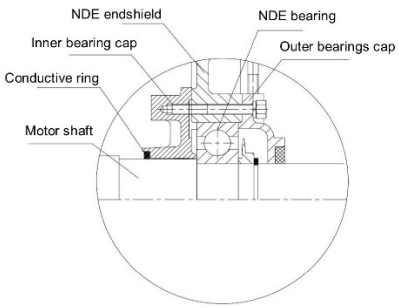

    c. Use of bearing and shaft coupling insulations techniques.
    d. Bonding and earthing cabling and potential equalizing systems.
e) Use inverters that have a switching frequency ≥ 8kHz. Lower switching frequency can increase motor temperature.
f) Motors intended to use with ambient temperature >50 °C shall be fed with cable of thermal stability not less than 95 °C.
g) The motors when provided with cables permanently connected shall have these cables protected against risk of damage due to mechanical stresses. The end connection shall be made according to one of the types of protection indicated in the IEC 60749-0 standard, certified for the intended use in accordance with installation rules in force in the site of installation.
h) When the flying leads are adopted, the IECEx certified cables glands certified for the intended use shall be adopted.
i) For Group IIC motors intended for marine application, the paint thickness might exceed 0,2mm. In this case clean the motor with a wet rag or by non-fractional means. See also 7.8.
j) All fasteners used for the assembly of the parts of the flameproof enclosure shall have at least a property class 8.8 (carbon steel) with a minimum tensile strength of 800 MPa and a minimum yield stress of 640 MPa. See Table 8 - Fasteners in chapter 4.4.3

9. Trouble shooting

These instructions do not cover all details or variations in equipment nor provide information for every possible condition to be met in connection with installation, operation or maintenance. Should additional information be required, please contact BEVI

The normal electrical failures and solutions are shown in Electrical failure. The normal mechanical failures and solutions are shown in Mechanical failure.

Electrical failure	Cause	Solution
1 - Motor fails to start	1) Power supply is not switched on.	1) Check switch, fuses, contactors and motor cable lugs.
	2) Stator winding is broken.	2) Leave the motor to skilled and certified service partner who will heat the broken part to the permissible insulation temperature to soften the varnish, pick up the disconnected wires and weld them. Then wrap the coils, varnish them and make them dry.
	3) Either winding earthed or short circuit between phases.	3) Leave the motor to skilled and certified service partner who will use the same method as 2) and make the earthed or short circuit portion insulated then varnish and dry the part.
	4) Connection mistakes in stator winding.	4) Leave the motor to skilled and certified service partner who will check connection diagram，heat the end turns and reconnect them correctly, then wrap, insulate and varnish them.
	5) Fuse burnt out.	5) Troubleshot and find out the cause. Replace the fuse with a new one.
	6) Wrong connection in the control device.	6) Check and correct the wiring connection.
2 - Fuse burnt after motor energized	1) Single-phase start.	1) Check power source cables, motor cables, fuses and switch contactors to find the broken wires or connection failures then solve the problems.
	2) Motor is overloaded or locked.	2) Adjust load value to rated one and deal with driven machine failure.

Electrical failure	Cause	Solution
3 - After energized, motor cannot start but has noise	1) Motor is overloaded or locked.	1) Inspect equipment and shoot the trouble.
	2) Check power sources so all phases have correct voltage.	2) Check connection of supply and/or feed. Replace fuse, fasten the loosened bolts the terminals, check the power source cables etc. with an instrument suitable for this work.
	3) too low voltage.	3) Change to Delta connection if it was misconnected as Star; Contact the power supply station if it is caused by power source; Adopt bigger cables if it is caused by the voltage drop of cables.
	4) Stearin grease or tight fitness for small-sized motors.	4) Select applicable grease and increase assembly quality.
4 - Live motor enclosure	1) Mix the power source cables and earthing cables.	1) Correct the mistake.
	2) Stator winding becomes damp and insulation ages severely.	2) Dry the motor and renew the aged insulation.
	3) Lead cables and terminal box are earthed.	3) Bind or renew outlet insulation and repair terminal box.
5 - Hard to start and speed lower than rated speed at full load	1) Power source voltage is too low.	1) Measure the power voltage at input points with a voltmeter or avometer and find the solution.
	2) Delta connection is misconnected as Star.	2) Change Star connection back to Delta.
	3) The rotor is coming off or broken.	3) Check and repair the rotor.
	4) Coils are more than original when rewound the winding.	4) Rewind the coils according to correct numbers.
	5) Winding gets moist or motor suffers from rain.	5) Heat to dry the motor.
	6) Aged winding insulation.	6) Coat the winding insulation or replace the insulation.
6 - Low insulation resistance	1) Winding gets moist or motor suffers from rain.	1) Heat to dry the motor.
	2) Aged winding insulation.	2) Coat the winding insulation or replace the insulation.

Electrical failure	Cause	Solution
7 - Abnormal noise during operation	1) Bearings are worn.	1) Repair or replace bearings.
	2) Stator or rotor core is loose.	2) Find the cause of vibration, re-press the core.
	3) Voltage is too high or unbalanced.	3) Measure the voltage on power source, find the cause and solve it.
	4) Bearing short of grease.	4) Clean the bearing and replenish grease with the amount of one-third to half of the bearing chamber volume.
	5) Fan contacts fan cover or the ventilation is blocked.	5) Repair fan and fan cowl and clear up ventilation area.
8 - Motor overheat or smoking	1) Too high-power source voltage makes flux density in stator core oversaturated and results in high temperature rise.	1) If supply voltage excesses standard value too much, contact power supply department.
	2) Too low power source voltage makes high temperature rise at full load.	2) Replace the cables by bigger ones if it is caused by voltage drop. Contact the power supply department if it is caused by low voltage.
	3) Stator and rotor interfered.	3) If it is caused by larger bearing clearance, replace the bearing. If it is caused by the shaft which is bent, align it. Repair the core if it is loose or deformed.
	4) Motor overload or big resistance from the driven machine, which lead to high temperature.	4) Solve the trouble of driven machine, reduce load if exceeding rated current as per the indication, adopt a larger motor or increase the capacity.
	5) Frequently starting or too many reverse rotations.	5) Reduce number of starts and reverse rotations or adopt an applicable motor.
	6) Fan failure or poor ventilation.	6) Check the fan to see whether it is damaged or the blades are deformed or not fixed properly. Replace the fan if necessary.
9 - Unbalanced no load current at big difference	1) Unbalanced power source voltage.	1) Measure the source voltage to find the cause.
	2) Winding failures such as short circuit coils, wrongly connected coils and etc.	2) Disassemble the motor to check polarity and failures in windings, correct polarity or shoot the troubles.
	3) Coils and turns are not equally distributed after rewind the stator winding.	3) Rewind the stator winding as per the instructions.

Mechanical failure	Cause	Solution
1 - Vibration	1) Worn bearing or the poor bearing clearance.	1) Check bearing clearance.
	2) Air gaps are not even.	2) Adjust air gap to meet specifications.
	3) Unbalanced fan or rotor.	3) Find out the cause and balance the fan, the rotor or the motor.
	4) The rigidity of enclosure or the foundation is not strong enough.	4) Find the root to reinforce the enclosure rigidity or foundation. Align the motor and fasten it.
	5) Shaft is bent.	5) Align the shaft.
	6) Rotor core is deformed or loose.	6) Adjust the iron core and then stack it again.
	7) Loose mounting/fixing bolts.	7) Fasten the bolts or replace them by qualified ones.
2 - High bearing temperature	1) Either too much or too less grease.	1) Replenish the bearing with grease according to operation instructions.
	2) Poor grease with impurities.	2) Check the impurities of grease and change to clean grease.
	3) Oil seal is fit too tight.	3) Repair or replace the oil seal.
	4) Eccentric inner bearing cap contacts the shaft.	4) Repair inner bearing cap to keep proper gap with shaft.
	5) End shields or bearing caps are not assembled properly.	5) Put end shield or bearing cap into spigot by correct process and then fasten bolts evenly.
	6) Bearings are worn or dirt etc.	6) Replace the damaged bearing. Clean the dirt bearings thoroughly and replenish grease.
	7) Eccentric coupling connection or too tight belt.	7) Align the motor with driven machine and adjust the tension of belt.
	8) Improper bearing size.	8) Select proper bearing size.
	9) Too big or too less bearing clearance.	9) Replace the bearing.

10. Exploded view

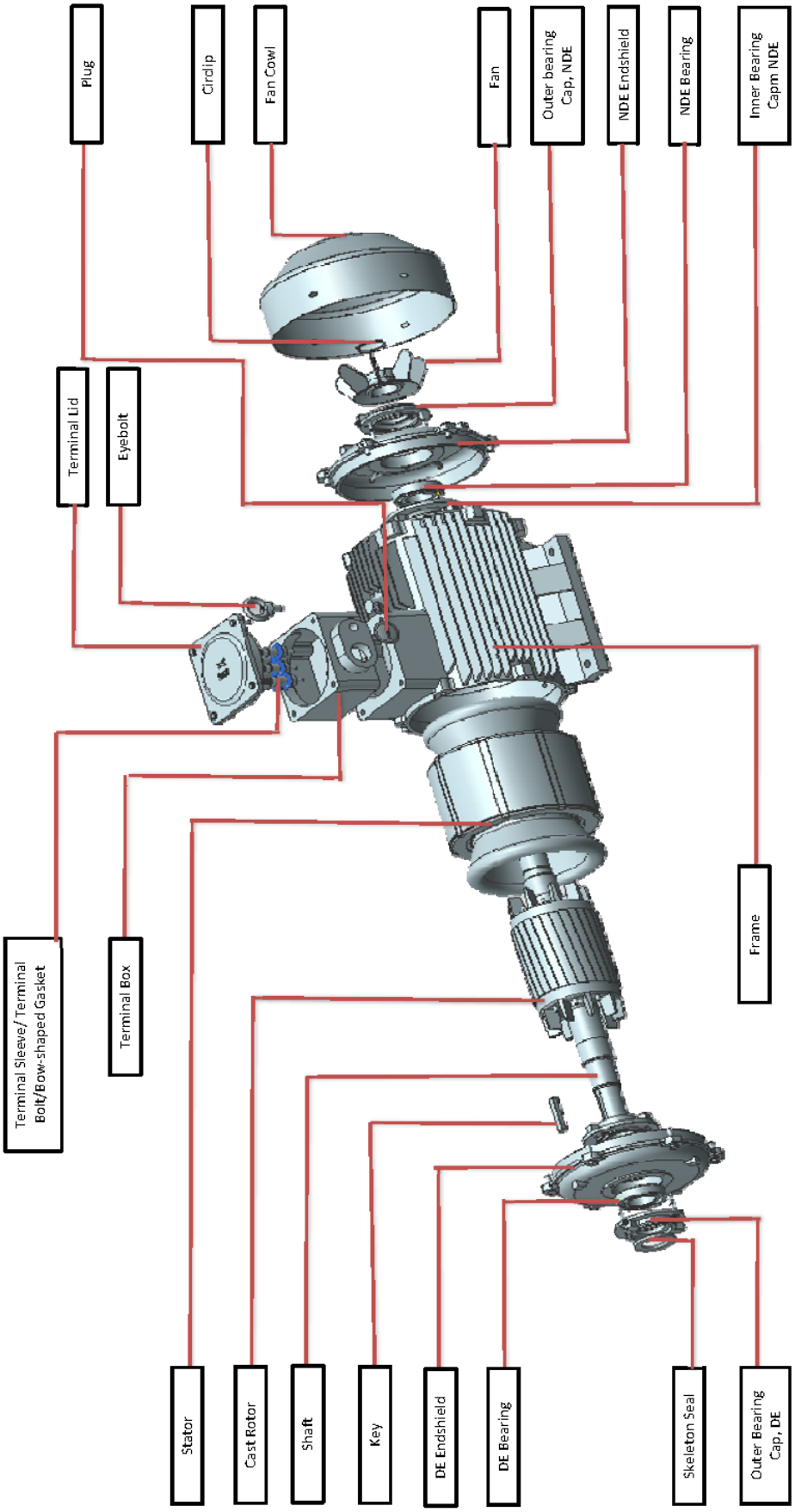

Sweden

BEVI AB (Head office)
Blomstermåla
Tlf. +46 499 271 00
info@bevi.se
www.bevi.se

BEVI AB
Umeå
Tlf. +46 90 70 44 30
bevinord@bevi.se
www.bevi.se

Denmark

BEVI A/S
Albertslund
Tlf. +45 39 67 36 05
bevi@bevi.dk
www.bevi.dk

Finland

BEVI Finland OY AB
Espoo
Tlf. +358 9 2709 1210
info@bevi.fi
www.bevi.fi

Norway

BEVI Norge AS
Oslo
Tlf. +47 23 19 16 50
info@bevi.no
www.bevi.no

China

BEVI Electric Shanghai Co., Ltd.
Shanghai
Tlf. +86 21 5032 5200
sales@bevi.cn
www.bevi.cn

India

BEVI Electric Private Limited.
Chennai
Tlf. +91 9444168976
alexander.daniel@bevi.com
www.bevi.com